DOUBLE-SIDED DOUBLE DENSITY FLEXIBLE DISK DRIVE M2894-63 STANDARD SPECIFICATION

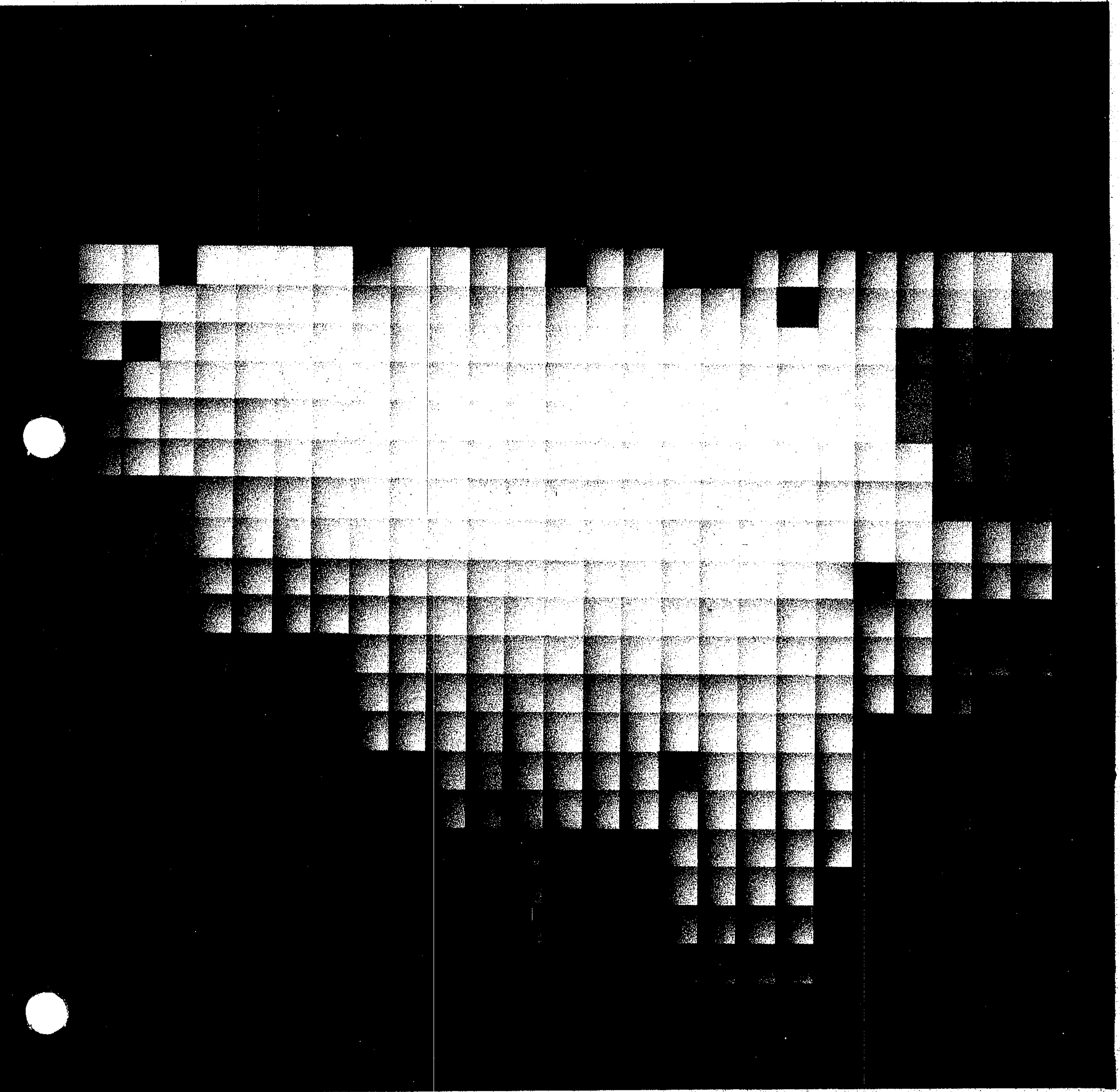

MITSUBISHI ELECTRIC

PRIORITY ONE ELECTRONICS
MITSUBISHI
(213) 709-5464
M2894-63 MAN
(800) 423-5922
$10.00
MITM289463M

MITSUBISHI M2894-63 OPTION SELECT GUIDE (SA850R COMPARISON)

	SA850R OPEN	SA850R CLOSE	M2894-63 OPEN	M2894-63 CLOSE
* SELECT DRIVE WITHOUT ENABLING STEPPER MOTOR OR LOADING HEAD	X	C	PJ-4, 5,7	
* SELECT DRIVE AND ENABLE STEPPER MOTOR WITHOUT LOADING HEAD	B, HL	DS,C	PJ-4, 5	PJ-7
* LOAD HEAD WITHOUT SELECTING DRIVE OR ENABLING STEPPER MOTOR	A, HL	DS,C	PJ-4, 5	PJ-7, A
* RADIAL READY[1]	RR,R		RR,R	
* RADIAL INDEX[2]	RI,I		RI,I	
* IN USE ALTERNATE INPUT (ACTIVITY LED)	D,Z	Y	Y	F,Z
* WRITE PROTECT OPTIONAL USE	WP	NP	WP	NP
* DISKETTE CHANGE (ALTERNATE OUTPUT)		DC		DC
* SIDE SELECTION, USING DIRECTION SELECT	S2	S1	PJ-8	
* SIDE SELECTION, USING DRIVE SELECT 1ST DRIVE 2ND DRIVE	S2	S3 DS1,2B DS3,4B	S2	S3 DS1,2B DS3,4B
* DOOR LOCK LATCH		DL D to HI	PJ-3	PJ4,5
* TWO SIDED		2S		2S
* WRITE CURRENT SWITCH	IW		CW	IW
* READY (STANDARD)	RM	RS		PJ-2
* READY (MODIFIED)	RS	RM	PJ-2	
* HEAD LOAD LATCH (USING "HEAD LOAD")	IT,A	C to HI	PJ-4	PJ-5,6
* HEAD LOAD LATCH (USING "IN USE")	A	D to HI	PJ-4,6	PJ-5

NOTE 1: OPEN ONLY RR ON 1ST DRIVE. CONNECT R TO ONE OF ALTERNATE I/O PINS 4,6 OR 8.
NOTE 2: OPEN ONLY RI ON 1ST DRIVE. CONNECT I TO ONE OF ALTERNATE I/O PINS 4,6 OR 8.

PCB (PCA, NAFHL) COMPONENT LOCATIONS

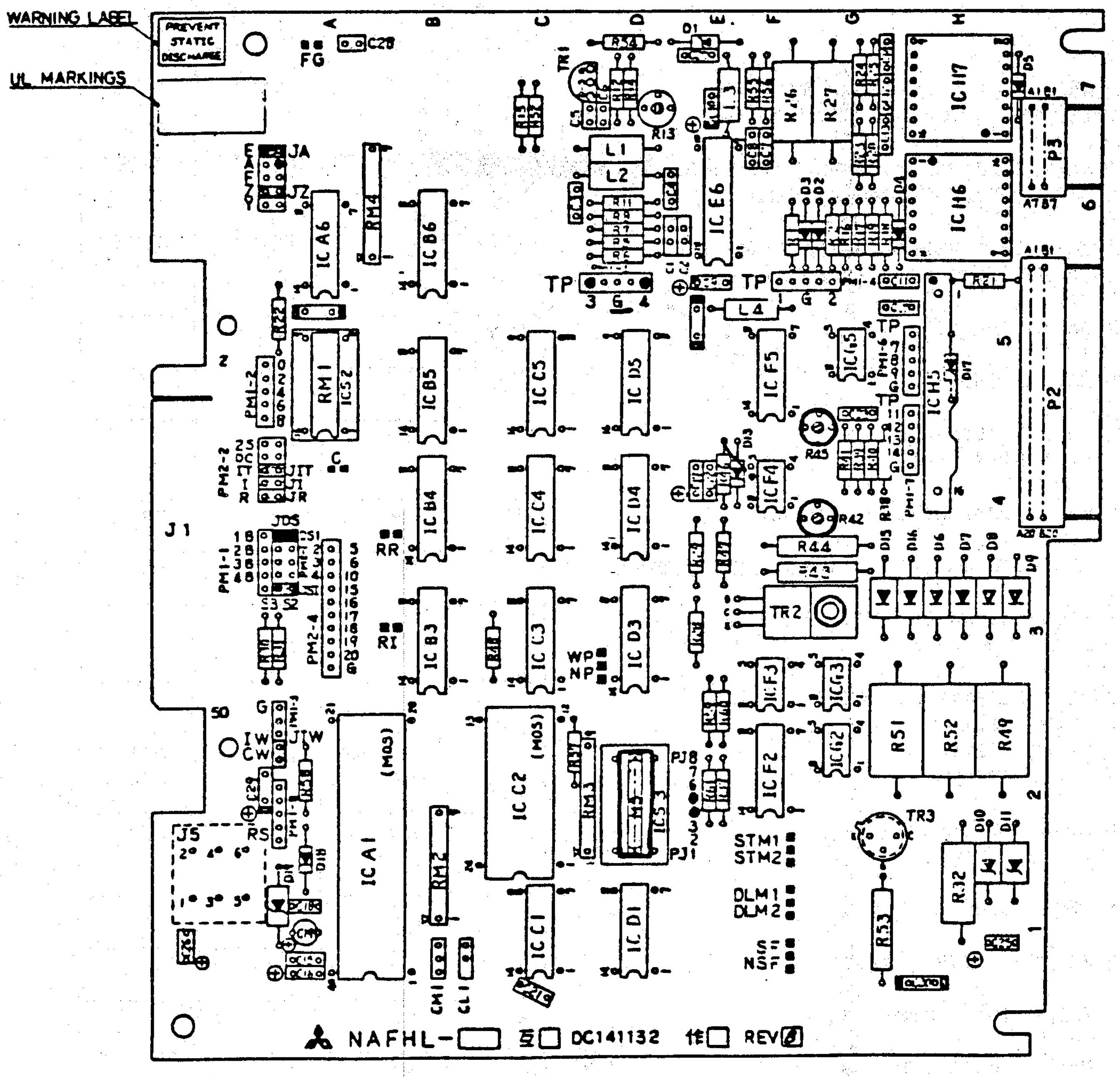

Printed-Circuit Board

CONTENTS

Page

CHAPTER 1 INTRODUCTION .... 1 - 1

1.1 General Description .... 1 - 1
1.2 Specifications .... 1 - 2
1.2.1 Performance specifications (Table 1 - 1) .... 1 - 2
1.2.2 Functional specifications (Table 1 - 2) .... 1 - 3
1.2.3 Physical specifications (Table 1 - 3) .... 1 - 4
1.2.4 Reliability specifications (Table 1 - 4) .... 1 - 5

CHAPTER 2 OPERATION OF MAJOR COMPONENTS .... 2 - 1

2.1 System Operation .... 2 - 1
2.2 Electronic Circuits .... 2 - 1
2.3 Rotation Mechanism .... 2 - 2
2.4 Positioning Mechanism .... 2 - 3
2.5 Read/Write Head .... 2 - 3

CHAPTER 3 ELECTRICAL INTERFACE .... 3 - 1

3.1 Signal Interface .... 3 - 3
3.1.1 Cabling method and input line termination .... 3 - 3
3.1.2 Line driver and line receiver .... 3 - 4
3.1.3 Input signal lines .... 3 - 5
3.1.4 Output signal lines .... 3 - 7
3.2 Power Interface .... 3 - 9
3.2.1 AC power .... 3 - 9
3.2.2 DC power .... 3 -10

CHAPTER 4 FUNCTIONAL OPERATION .... 4 - 1

4.1 Power On Sequencing .... 4 - 1
4.2 Drive Selection .... 4 - 1
4.3 Track Accessing .... 4 - 1
4.4 Side Selection .... 4 - 1
4.5 Read Operation .... 4 - 1
4.6 Write Operation .... 4 - 2
4.7 Special Operations .... 4 - 2
4.7.1 Internal write current switch .... 4 - 2
4.7.2 Internal switch filter .... 4 - 3

CHAPTER 5 PHYSICAL INTERFACE .... 5 - 1

5.1 Signal Connectors (J1/P1) .... 5 - 1
5.2 DC Power Connector (J5/P5) .... 5 - 2
5.3 AC Power Connector (J4/P4) .... 5 - 2
5.4 Interface Connectors Physical Location .... 5 - 3

CHAPTER 6 CUSTOMER INSTALLATION OPTIONS .... 6 - 1

6.1 Select Drive Without Loading Heads or Enabling Step Motor .... 6 - 4
6.2 Select Drive and Enable Stepper Without Loading Heads .... 6 - 4

		Page
6.3	Load Heads Without Selecting Drive or Enabling Step Motor	6 - 4
6.4	Stepper Power Control	6 - 5
6.5	Radial Ready	6 - 5
6.6	Radial Index	6 - 6
6.7	In Use Alternate Input (Activity LED)	6 - 6
6.8	Write Protection Option Use	6 - 7
6.9	Disk Change (Alternate Output)	6 - 8
6.10	Side Selection Using Direction Select	6 - 8
6.11	Side Selection Using Drive Select	6 - 8
6.12	Door Lock Latch	6 - 8
6.13	Two-Sided	6 - 9
6.14	Write Current Switch	6 - 9
6.15	Ready Standard/Ready Modified	6 - 9
6.16	Head Load Latch	6 - 9
6.17	Door Lock Condition	6 - 10
6.18	Head Unload Condition	6 - 10
CHAPTER 7	DRIVE PHYSICAL SPECIFICATIONS	7 - 1
7.1	Drive Dimensions	7 - 1
7.2	Mounting Recommendations	7 - 1
CHAPTER 8	ERROR DETECTION AND CORRECTION	8 - 1
8.1	Write Error	8 - 1
8.2	Read Error	8 - 1
CHAPTER 9	RESHIPMENT PRECAUTIONS	9 - 1

CHAPTER 1 INTRODUCTION

The MITSUBISHI M2894 Flexible Disk Drive is a double-sided disk drive employing a high-performance, economical, standard 8-inch diskette, providing the device with high reliability and the medium with a long service life to meet customer requirements.

- Main features -

o Interchangeable with IBM systems in media and formats.

o High quality and long life Mn-Zn all-ferrite heads, requiring no write precompensation.

o Enhanced tracking capability of the medium surface provided by a new type circular gimbal spring in the read/write head suspension mechanism with lower loading pressure.

o Media Tap-Tap life reaching many hundreds of thousands of load/unload operations for the same point on the same track. Heads are unloaded for both sides during waiting, eliminating unnecessary contact with the medium.

o Media need not be specifically designated by brand name. Diskette quality variation affects the performance of the drive only negligibly.

o Stable media interchangeability is allowed by a wide window timing margin and off-track margin. Temperature and humidity ranges are fully covered with excellent stability.

o Further high reliability is offered by control logic employing an LSI microprocessor.

1.1 General Description

o The M2894 flexible disk drive is a 1-megabyte memory capacity disk drive, employing two magnetic heads for recording on both sides of the medium, at double density, thus providing a capacity 4 times as high as the 250 kilobytes offered by conventional single-sided, standard density drives.

o The M2894 reads and writes on an 8-inch diskette, either one or both sides, and in single or double density.

o The M2894 is equal in size and plug-compatible to the Industrial Standard.

o The M2894 is media-compatible with units employing IBM diskettes 1, 2, and 2D or equivalent.

o The M2894 provides a stabilized, soft media contact by using an entirely new circular gimbal spring in the mechanism for holding the magnetic heads with lower loading pressure. Thus, excellent read/write operation and a long service life are offered. This mechanism significantly reduces the effects of jacket deformation or

variations in thickness, thereby stabilizing read and write performance. Thus, it is unnecessary to select a special maker's product any more.

The magnetic head has a slider and a head core entirely consisting of non-magnetic and magnetic Mn-Zn ferrites, both sintered to a high density (all-ferrite assembly). This provides a high-precision, pinhole-free sliding surface. The four corners and edges of the slider are smoothly blended and finished so that no stress is given to the medium, providing wear resistance and thus a prolonged service life.

o The M2894 head loading mechanism uses a closed-loop electric damping system employing a magnetic sensor. The magnetic heads load on the medium surface so softly that almost no scratching is caused by repeated loading and unloading (tap-tap). (Many hundreds of thousands of tap-tap tests at the same point on the same track reduce the magnetic head readout level, including the adjacent tracks, only 25% or less in comparison with the level at other points on the track.)

o The M2894 incorporates a microprocessor in the control circuit to execute various controls and to switch the combination of customer options. The use of the microprocessor simplifies the circuits and enhances reliability of the device.

o The M2894 can be mounted in a standard 19-inch RETMA rack as a set of parallel units.

1.2 Specifications

1.2.1 Performance specifications (Table 1-1)

Table 1-1 Performance Specifications

	Single density	Double density
Memory capacity		
Unformatted		
Disk (kilobytes)	800	1600
Surface (kilobytes)	400	800
Track (kilobytes)	5.2	10.4
Formatted (bytes/sector)	256	256
Disk (kilobytes)	568	985
Surface (kilobytes)	284	492
Track (kilobytes)	3.84	6.66
Transfer rate (kilobits per second)	250	500

(cont'd)

	Single density	Double density
Mean latency time (milliseconds)	83	
Access time (milliseconds)		
Track to track	3	
Average	91 (including step time of 3 milliseconds and settling time)	
Settling time	15	
Head-loading time	35	

1.2.2 Functional specifications (Table 1-2)

Table 1-2 Functional Specifications

	Single density	Double density
Recording density (bits per inch)	3408	6816
Magnetic flux inversion density (FCI)	6816	6816
Encoding method	FM	MFM
Track density (tracks per inch)	48	
Number of cylinders	77	
Number of tracks	154	
Number of heads	2	
Rotation speed (rpm)	360	
Rotation period (milliseconds)	166.7	
Index	1	
Media	8-inch Flexible Disk Cartridge equivalent to IBM diskette 1, 2, or 2D	

1.2.3 Physical specifications (Table 1-3)

Table 1-3 Physical Specifications

AC Power requirements	
115 V AC specifications	50/60 Hz + 1% 115 V (85 to 127), 0.4 A typical
230 V AC specifications	50/60 Hz ± 1% 230 V (170 to 253), 0.2 A typical
DC Power requirements	
+5 V	+5 V ± 5%, 0.8 A typical
+24 V	+24 V ± 10%, 0.85 A typical
Operating environmental conditions	
Ambient temperature	41° to 109°F (5° to 43°C)
Relative humidity	20% to 80% (Maximum wet bulb temperature: 85°F (29.4°C))
Vibration	0.25 g (10 to 100 Hz)
Non-Operating environmental conditions	
Ambient temperature	-14° to 122°F (-10° to 50°C)
Relative humidity	20% to 80%
Vibration	3 g (10 to 100 Hz)
Heat dissipation	190 BTU/hour typical (55 watts)
Physical dimenions	(Except for front panel)
Height	4.62 inches (117 mm)
Width	8.55 inches (217 mm)
Depth	14.18 inches (360 mm)
Front panel dimensions	
Compact panel	4.62 x 8.68 inches (117 x 220 mm)
Large panel (Option)	5.25 x 10.0 inches (133 x 254 mm)
Weight	13.0 lbs (6 kg)

1.2.4 Reliability specifications (Table 1-4)

Table 1-4 Reliability Specifications

MTBF	10,000 POH or more
MTTR	30 minutes
Unit life	5 years or 20,000 energized hours, whichever occurs earlier
Medium life	
Rotational life	3.5×10^6 pass/track or more
Tap-tap	10^5 on the same spot of a track or more
Insertion	3×10^4 or more
Error rate	
Soft read error	10^{-9} bit
Hard read error	10^{-12} bit
Seek error	10^{-6} seek
Preventive maintenance	Spindle pulley belt change/18 months recommended

CHAPTER 2 OPERATION OF MAJOR COMPONENTS

2.1 System Operation

The M2894 Flexible Disk Drive consists of a mechanism to rotate the medium, two read/write heads, an actuator to position the read/write heads on tracks, a solenoid to load and unload the read/write heads on the medium, and electronic circuits to drive these components.

The rotation mechanism rotates a medium at 360 rpm. The medium is inserted in the drive and is clamped by a collet and spindle connected to the motor with a belt. The positioning actuator positions the read/write heads to the desired track on the medium. The head-loading solenoid loads the read/write heads on the medium to perform a read or write operation. The heads are unloaded for both sides of the medium during non-operation.

2.2 Electronic Circuits

The circuits to drive all mechanisms in the disk drive are mounted on a printed-circuit board. The circuits on the printed-circuit board include:

- o Line driver and receiver, sending and receiving signals to and from the host system;
- o Drive selection circuit;
- o Index detection circuit;
- o Head-positioning actuator drive circuit;
- o Head-loading solenoid drive circuit;
- o Read/write circuit;
- o Write protect circuit;
- o Track 00 detection circuit;
- o Drive ready detection circuit;
- o Head selection circuit;
- o In use, door lock circuit, and panel indicator LED drive circuit.

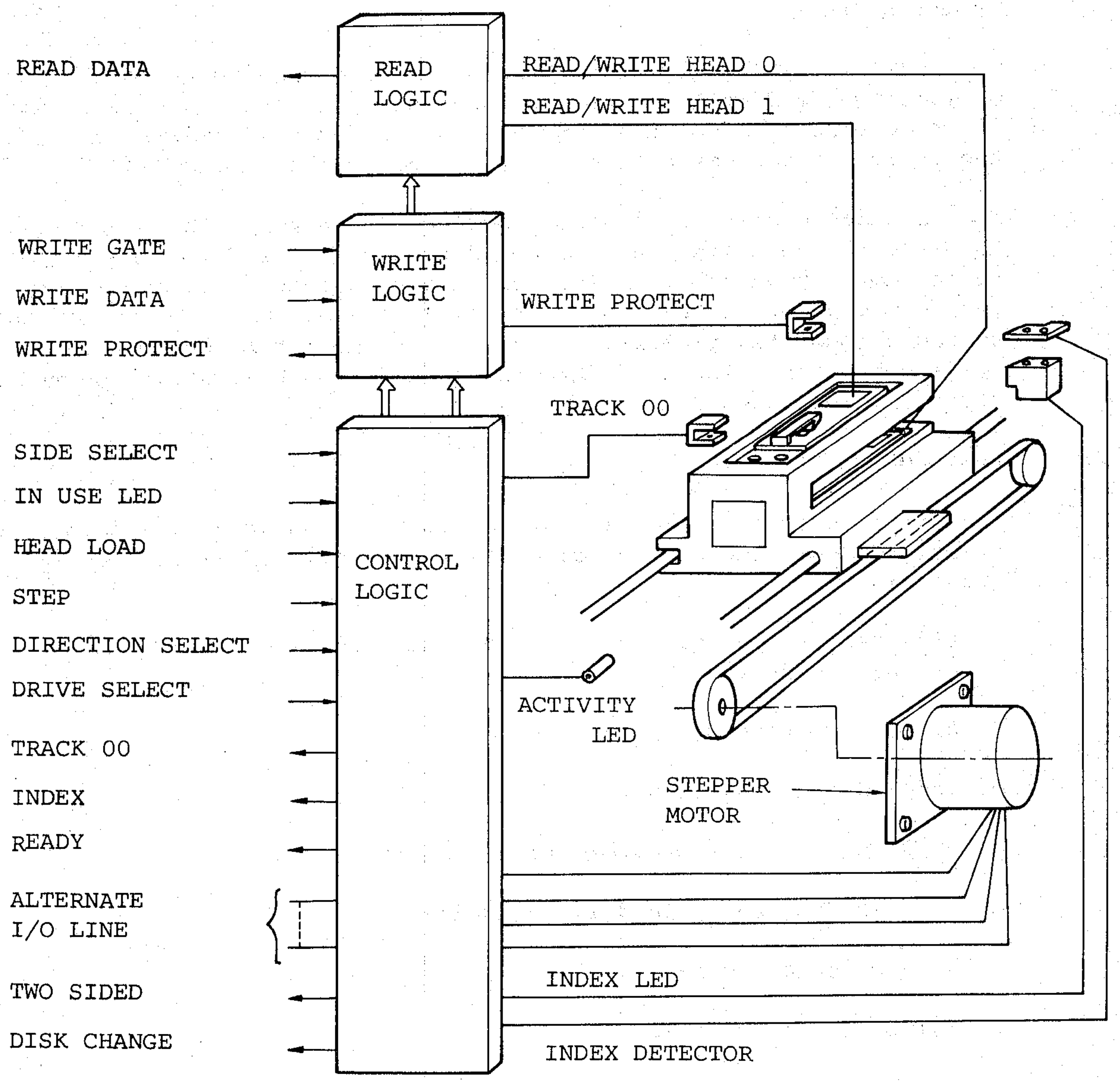

Fig. 2-1 M2894 Functional View

2.3 Rotation Mechanism

The diskette rotation mechanism creates 360 rpm rotation of the spindle connected to an AC motor through a belt and pulleys. Either 50 Hz or 60 Hz power can be used by replacing the drive motor pulley. The pulley for frequency conversion can be supplied from the factory as an attachment screwed to the frame, according to option requirements. It is unnecessary to change the drive belt to mate with the type of the pulley.

2.4 Positioning Mechanism

The read/write head is positioned as follows: The head carriage assembly is connected to a steel band hooked on the capstan on the 4-phase PM type stepping motor. The capstan is located near the spindle, and a 1.8° turn of the stepping motor moves the read/write head a distance of one track to the specified direction. The reason that the stepping motor is located near the spindle is to minimize dislocation between the read/write head and the tracks, which may be caused by ambient temperature change or by temperature rise of the frame due to heat transmitted from the stepping motor or drive motor.

2.5 Read/Write Head

The read/write head uses an all-ferrite head consisting of special non-magnetic and magnetic MnZn ferrites. The head incorporates three ferrite head cores; erase head cores for erasing the space between the tracks (tunnel erase) are arranged at both sides of the read/write core. Both of the two facing heads, interposed with a jacket, are moved by the head-loading solenoid and load on, or contact, the disk.

These heads are mounted on a soft, circular gimbal spring so that they correctly follow the track to maximize the signal reproduced from the disk. This surface tracking of the circular gimbal head minimizes stress on the disk surface and contributes to an improved diskette service life, with lower loading pressure.

CHAPTER 3 ELECTRICAL INTERFACE

There are two electrical interfaces: signal interface and power interface. The power interface is classified for AC power and DC power.

The signal interface transmits and receives control signals and read/write data to and from the M2894 or the host system through the J1/P1 connector.

The AC power interface drives the M2894 spindle drive motor via the J4/P4 connector. The DC power interface feeds power, via the J5/P5 connector, to the electronic circuits (a printed-circuit board) and to the stepping motor that drives the mechanism for positioning the read/write heads.

The signals and pin arrangement of these three types of interfaces are shown in Tables 3-1, 3-2, and 3-3.

Table 3-1 DC Power Connector Pin Arrangement (J5/P5)

Power voltage	Pin number	Remarks
+24 V DC	1	
+24 V GND (Return)	2	
DC GND	3	
(NOT USED)	4	
+5 V DC	5	
+5 V GND (Return)	6	

Table 3-2 AC Power Connector Pin Arrangement (J4/P4)

AC Power for motor	Pin number	Remarks
115 V/230 V AC	1	
Frame Ground	2	
115 V/230 V AC Return	3	

Table 3-3 Signal Connector Pin Arrangement (J1/P1)

Signal name	Signal pin number	Ground return pin number	Option
ALTERNATE I/O	2	1	- WRITE CURRENT SWITCH
ALTERNATE I/O	4	3	
ALTERNATE I/O	6	5	
ALTERNATE I/O	8	7	
ALTERNATE I/O	10	9	- TWO-SIDED
ALTERNATE I/O	12	11	- DISK CHANGE
- SIDE SELECT	14	13	
ALTERNATE I/O	16	15	- IN USE
ALTERNATE I/O	18	17	- HEAD LOAD
- INDEX	20	19	
- READY	22	21	
(NOT USED)	24	23	
- DRIVE SELECT 1	26	25	
- DRIVE SELECT 2	28	27	
- DRIVE SELECT 3	30	29	
- DRIVE SELECT 4	32	31	
- DIRECTION SELECT	34	33	
- STEP	36	35	
- WRITE DATA	38	37	
- WRITE GATE	40	39	
- TRACK 00	42	41	
- WRITE PROTECT	44	43	
- READ DATA	46	45	
(NOT USED)	48	47	
(NOT USED)	50	49	

3.1 Signal Interface

The signal interface is classified into control signals and data signals. These interface signal lines are all at TTL levels. The signal level meaning and characteristics are as follows:

o True = Logical "0" = V_L 0 V to +0.4 V
I_{in} 40 mA max.

o False = Logical "1" = V_H +2.5 V to +5.25 V
I_{in} 0 mA

o Input impedance = 150 ohms

3.1.1 Cabling method and input line termination

The M2894 cable connection uses a daisy chain system. Ribbon cables or twisted-pair cables are connected with multiple connectors, enabling a maximum of 4 drives to be connected.

These drives are controlled in a multiplex system using drive select lines so that any one drive can be accessed.

Fig. 3-1 shows the cabling method and input line termination.

The M2894 input signal lines must be terminated in a maximum of 8 lines, if alternate input is included, except for the drive select lines. In order to operate the drive correctly, the termination must be at the drive connected to the end of the interface cable farthest from the host system.

The M2894 allows a detachable resistor module to be mounted on its printed-circuit board to terminate these input signal lines.

The drive is delivered from the factory with a resistor module at location A5 on the printed-circuit board. This terminator resistor must be removed from all the drives except the one that connects to the end of the interface cable.

The termination may be ended at the outside. To do so, connect the input signal lines (except for the drive select lines) to 150-ohm, 1/4-watt resistors, and tie the other lead to +5 V DC. In this external termination method, the resistor must be mounted near the drive connected to the end of the cable. When the cable end connector is open, terminate with this connector.

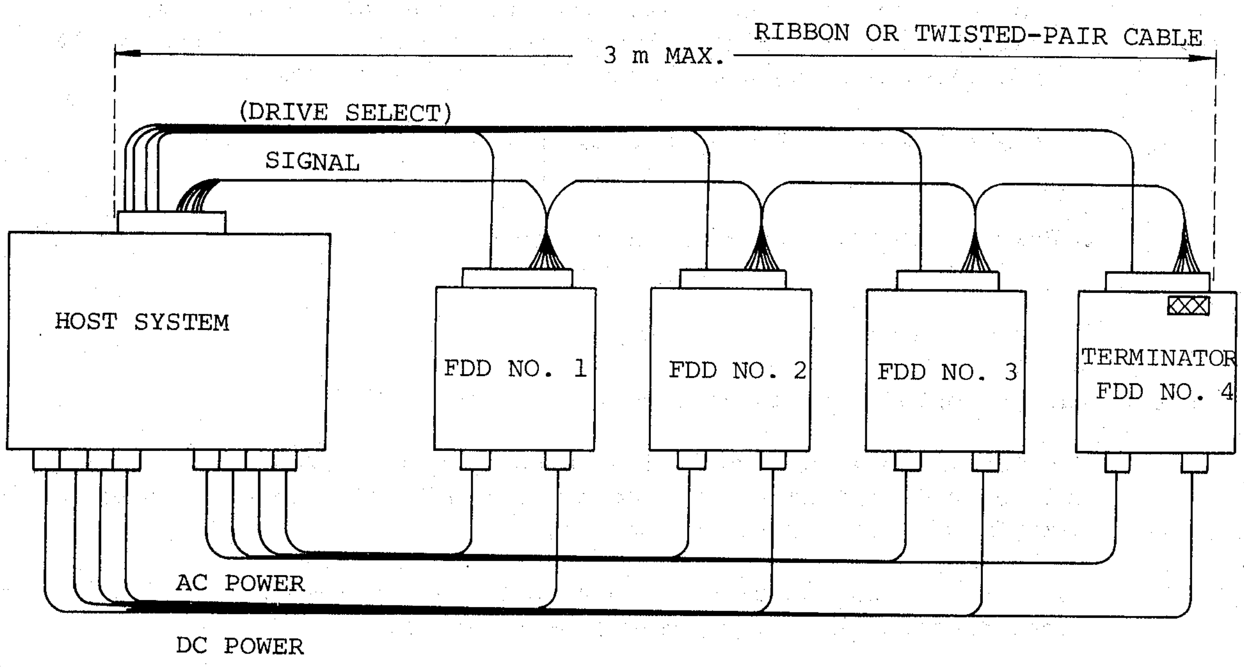

Fig. 3-1 Cabling Method (Schematic Diagram)

3.1.2 Line driver and line receiver

The recommended interface circuit for the line driver and line receiver in the host system and the drives is shown in Fig. 3-2.

The preferred line receiver circuit is a Schmitt trigger circuit having a hysteresis characteristic at switching level in order to improve anti-noise properties in the interface line.

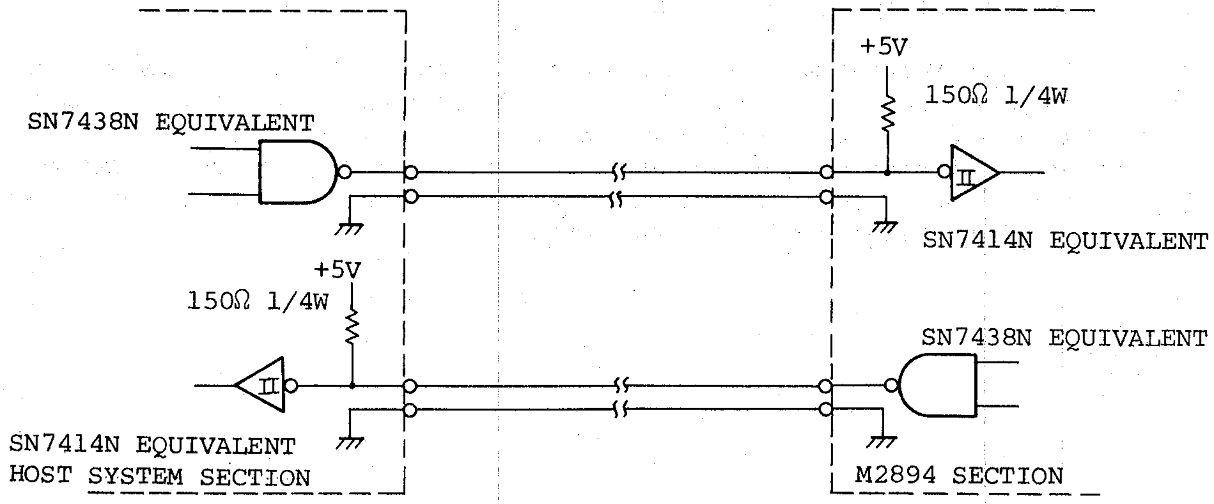

Fig. 3-2 Interface Circuit Recommended for Line Driver and Line Receiver

3.1.3 Input signal lines

The M2894-63 has 12 input signal lines. Of these, 9 lines are standard and 3 lines are options in accordance with customer requirements.

There are two types of input signals; one is multiplexed in a multi-drive system and the other performs a multiplex operation.

The multiplex operating signals are:

o Drive select 1

o Drive select 2

o Drive select 3

o Drive select 4

(1) Drive select 1 to 4

When these drive select lines are at the logical "0" level, a multiplexed input/output line becomes active to enable the read/write operation. These 4 separate input signal lines, drive select 1 to 4, are provided to make it feasible to connect 4 drives to one system and multiplex them to one another. Traces DS1, DS2, DS3, and DS4 on the M2894 printed-circuit board are used to determine the drive select line to which the individual drives should correspond to become active. These changes of trace connections are made through jumpers. The jumpers are set to DS1 at delivery and so must be changed to other lines as required.

(2) Side select

This interface line is used to select, which disk surface of the diskette should be read or written. When this line is logical "1," the head at Side 0 is selected. A line at logical "0" selects the head at Side 1.

When the polarity of the side select signal is reversed, the read/write operation must be delayed 100 μs before execution. When a write operation is completed, the side select signal polarity reversal must be delayed 700 μs. The reason for this is as follows: The head uses a tunnel erase system and therefore the core gaps physically disagree between those in the read/write head and erase head. This, in turn, causes timing difference between the areas at the data writing operation and erasing operation, and thus leaves non-erased areas. This is corrected within the M2894 by delaying the erase current cutoff for several hundred microseconds. So, during this delay time, the head select must not be reversed.

The same condition applies to the completion of write operation, when track access operation (that gives step signal pulses) must not be performed during 700 μs after the last write operation. Step signal pulses, if given during this period, are ignored.

(3) Direction select

When step signal pulses are given, this interface line signal controls the direction, inward or outward, in which the read/write head moves.

When this signal is logical "1," the read/write head moves toward the outside of the disk. Logical "0" moves the head in the reverse direction.

In the jumper select option, this interface line can time-share two operations: direction select during a track access operation and side select during a read/write operation.

The line then becomes effective as side select signal 14 ms after the track access operation is completed (after the last step signal pulse has been sent).

This option is described in detail in section 6.10.

(4) Step

This interface line is a pulse signal to move the read/write head in the direction defined by the direction select line. Each time a signal pulse is given to the step line, the read/write head moves by one track.

This line normally maintains a logical "1" level; the step operation starts from the trailing edge of a negative-going pulse (reversal from logical "0" to logical "1").

The direction select line must be reversed 1 μs or more before the trailing edge of the step pulse and 25 μs or more after it.

(5) Write gate

At logical "0," this interface line makes the write driver active, and the data given to the write data line is written on the disk surface that has been side-selected. At logical "1," the line makes the write driver inactive to enable the read data logic. The verified read data, however, are not obtained during 700 μs after the write gate becomes inactive.

Refer to section 4 for the timing.

(6) Write data

This interface line receives data to be written on the diskette. This line, normally at logical "1," reverses the write current at the leading edge (reversal from logical "1" to logical "0") of the data pulse (negative-going pulse) and writes data bits.

This line is enabled when the write gate is at logical "0."

Fig. 3-3 shows the write data timing.

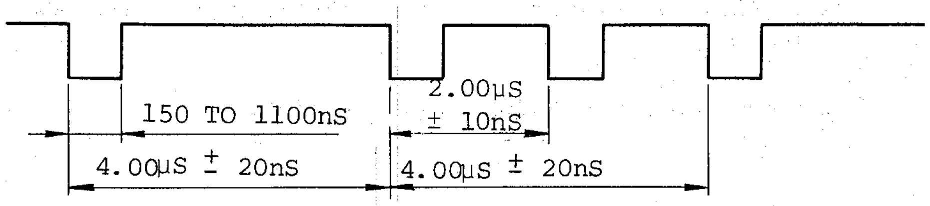

Fig. 3-3 Write Data Timing (FM Encoding)

(7) Head load (alternate input option)

This interface line is an option selected by the customer. When the diskette is inserted, the door is closed, and when this line goes to logical "0," the read/write head loads on the disk surface. The read/write operation must be performed 35 ms or more after the head load line has become active.

For maximum media life, this option is recommended for M2894.

Refer to section 6 for details of this option.

(8) In use (alternate input option)

This interface is an option selected by the customer. When trace "F" is connected and this line is at logical "0," the front panel indicator LED lights and the door is locked.

Refer to section 6.7 for details.

(9) Outside write current switch (alternate input option)

This interface is an option selected by the customer.

Trace "CW" is opened and trace "IW" is connected. Setting logical "1" for tracks 00 to 43 provides a large write current. Logical "0" in the range of tracks 44 to 76 gives a small write current.

Otherwise, trace "CW" is connected in the standard M2894, and the write current is switched by the internal track counter.

See section 6.14 for a detailed description of this signal.

3.1.4 Output signal lines

Five standard output signal lines are available from the M2894. In addition, two output line options and six alternate output lines can be selected.

(1) Index

This interface is normally maintained at logical "1." Each

diskette turn (166.7 ms period) provides a pulse 1.8 ms in width at logical "0." This signal indicates the start of a track on the rotating diskette. Because the index hole on the jacket is located differently on the single and two-sided diskettes, the drive has two detectors to find the index for whichever diskette is inserted.

Fig. 3-4 shows the index signal timing.

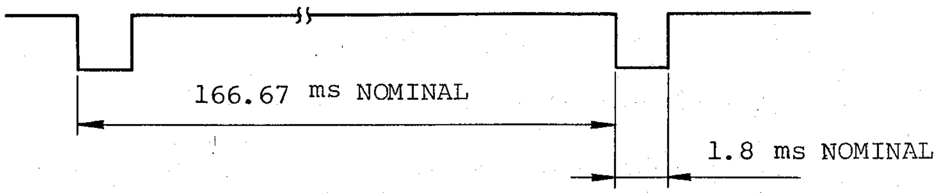

Fig. 3-4 Index Timing

(2) Track 00

When this interface line is at logical "0," it indicates that the read/write head in the drive is positioned to track 00. When the selected drive output is at logical "1," it indicates that the read/write head is positioned at a location other than track 00.

(3) Ready

When this interface line is at logical "1," the door is open or the diskette is not inserted into the drive. When the diskette is inserted into the drive, the door is closed, the index hole is correctly detected, DC power (+5 V and +24 V) is supplied, and thereafter the index is detected two or more times, then logical "0" (ready) occurs. During a single-sided diskette is inserted, if the read/write head at Side 0 is selected, this signal is logical "0," but at Side 1 selection, logical "1" is generated. For two-sided diskettes, logical "0" is maintained independently of side selection.

For a detailed description, refer to section 6.15.

(4) Read raw data

This interface line causes the read/write head to read the data stored on the diskette surface and to output raw data (data and clock synthesis) converted to a pulse signal.

This line is normally at logical "1," but sends logical "0" (negative-going pulse) output pulses during a read operation. Fig. 3-5 shows the timing variation for the usual diskette and the allowance for bit shifts.

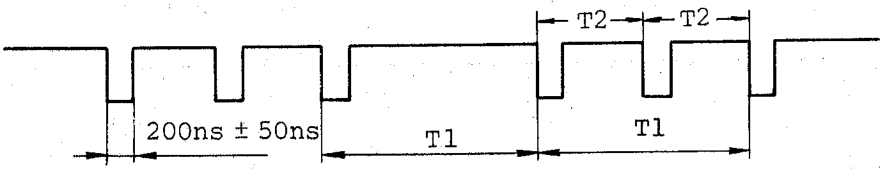

T1 = 4.00μS ± 800nS (Jitter due to rotation variation is not included.)

T2 = 2.00μS ± 400nS

Fig. 3-5 Read Data Timing (FM encoding)

(5) Write protect

This interface signal informs the host system that a diskette with a write protect notch is inserted into the drive. Inserting the write-protected diskette into the drive generates a logical "0." When this signal is at logical "0," a write operation on the diskette is inhibited even when the write gate line is active. Refer to section 6.8.

(6) Disk change (alternate output option)

Refer to section 6.9.

(7) Two-sided (alternate output option)

Refer to section 6.13.

(8) Alternate I/O pins

These interface pins are options selected by the customer. Use of the pins is described in section 6.5 or 6.6.

3.2 Power Interface

The M2894 requires two types of power supplies.

One is AC power for the drive motor to rotate the diskette. The standard AC power is 115 V AC, 60 Hz. Also, options allow the use of 110 V AC, 50 Hz; 230 V AC, 50 Hz; and 220 V AC, 50 Hz.

The other is +5 V and +24 V DC power for the electronic circuits and the stepping motor.

3.2.1 AC power

AC power for the drives is supplied via connector J4/P4 attached to the rear of the drive.

The standard and optional power specifications are shown in Table 3-4.

Table 3-2 shows the pin arrangement of connector J4/P4.

Table 3-4 AC Power Specifications

	50/60 Hz		50/60 Hz	
	115 V (standard)	230 V	110 V	220 V
Voltage range (V AC)	85 to 127	170 to 253	85 to 127	170 to 253
Maximum current (Amperes)	0.5	0.4	0.5	0.4
Frequency variation (%)	±1.0		±1.0	

3.2.2 DC power

DC power is supplied through connector J5/P5 attached on the soldered surface of the printed-circuit board. Two DC voltage specifications are shown in Table 3-5, and the pin arrangement of connector J5/P5 is shown in Table 3-1.

Table 3-5 DC Power Specifications

DC voltage	Voltage variations	Current	Maximum ripple voltage (peak-to-peak)
+5 V DC	±0.25 V (±5%)	1.0 A MAX. 0.8 A TyP.	100 mV
+24 V DC	±2.4 V (±10%)	1.0 A MAX. 0.85 A TyP.	200 mV

CHAPTER 4 FUNCTIONAL OPERATION

4.1 Power On Sequencing

To operate the M2894, AC power and DC power must be turned on. Read/write operations must not be performed within 2 seconds after AC power is turned on, to allow the diskette rotation to stabilize. Read/write operations also must wait 200 ms after DC power is turned on for control signals to be stabilized.

After AC and DC power turn on, probably the read/write head is not correctly positioned on the track. Before a read/write operation, make sure to perform a step-out operation with the controller until the track 00 signal is detected at the interface line to enable the read/write head to be positioned correctly.

Fig. 4-1 shows the power on sequence timing.

4.2 Drive Selection

The M2894 uses a daisy chain cabling system in which multiple drives connect to a single cable. The selection of individual drives is actuated when the drive select line goes active. Only the drive whose selection line is active can communicate with the host system. When multiple drives are connected, the select line at the drive side must be set to a different number for each drive. If the same number is set in more than one drive, the interface output signals mutually interfere and operating errors occur.

4.3 Track Accessing

The seek operation moves the read/write head inward or outward to the desired position as determined by the polarity of the "direction" signal, using the "step" signal to move the head. To move plural tracks, step pulses should be emitted until the heads reach the desired tracks. Head motion starts with the trailing edge of a step pulse. Fig. 4-2 shows the operation timing.

4.4 Side Selection

The heads located on both sides of the diskette are selected by the "side select" signal. When the side select line is high, the head at Side 0 is selected; when it is low, the head at Side 1 is selected.

4.5 Read Operation

Fig. 4-3 shows the timing relationship required for a read operation. These timing specifications are necessary for an accurate read operation to be performed. FM or MFM is used for coding data to be stored on the diskette. FM is used for single density, and MFM for double density recording.

Fig. 4-5 shows the coded data timing.

4.6 Write Operation

Fig. 4-4 shows the timing relationship required for a write operation. These timing specifications must be followed for an accurate write operation to be performed.

Either FM or MFM can be used for coding write data. The M2894 incorporates high performance read/write heads having good contact stability between the head and diskette. It is therefore unnecessary, when writing data with MFM (double density), to apply precompensation that corrects bit shift effect at write operation.

4.7 Special Operations

The M2894 is provided with a write current switch that effectively reduces the bit shift value of read data pulses from the diskette, and is also provided with a function, in the drive, to generate signals that make the data separator timing margin high even if the host system does not have an interface signal for post compensation, called a switch filter, compensating read amplifier frequency band.

More specifically, the track numbers are stored in the microprocessor that processes most signals for M2894 operation, so that the microprocessor generates a write current switch signal that reverses output at track 44 or above, and a switch filter signal that reverses output at track 60 or above.

In order for these signals to be generated, the track register must cause the read/write heads to be moved to track 00, so that the register contents are initialized to track 00 under each of the following conditions:

o Drive power is turned on,

o Seek error occurs.

These are conditions in which the track number that the host system tries to access is not clear. In any case other than power turn-on, in which the read/write head positioned-track numbers in each drive are clear, there are no errors between track register in the drives and the host system. In such a case, it is unnecessary to move the read/write head to track 00 to initialize track registers of the drives.

4.7.1 Internal write current switch

By connecting the trace "CW" on the M2894 printed-circuit board, write current can be increased for tracks 00 to 43 and decreased for tracks 44 to 76.

4.7.2 Internal switch filter

By connecting trace "SF" on the M2894 printed-circuit board, the gain in the high area in the read preamplifier frequency bandwidth decreases for tracks 00 to 59, and the gain increases for tracks 60 to 76, thereby effecting a decrease in bit shift variation.

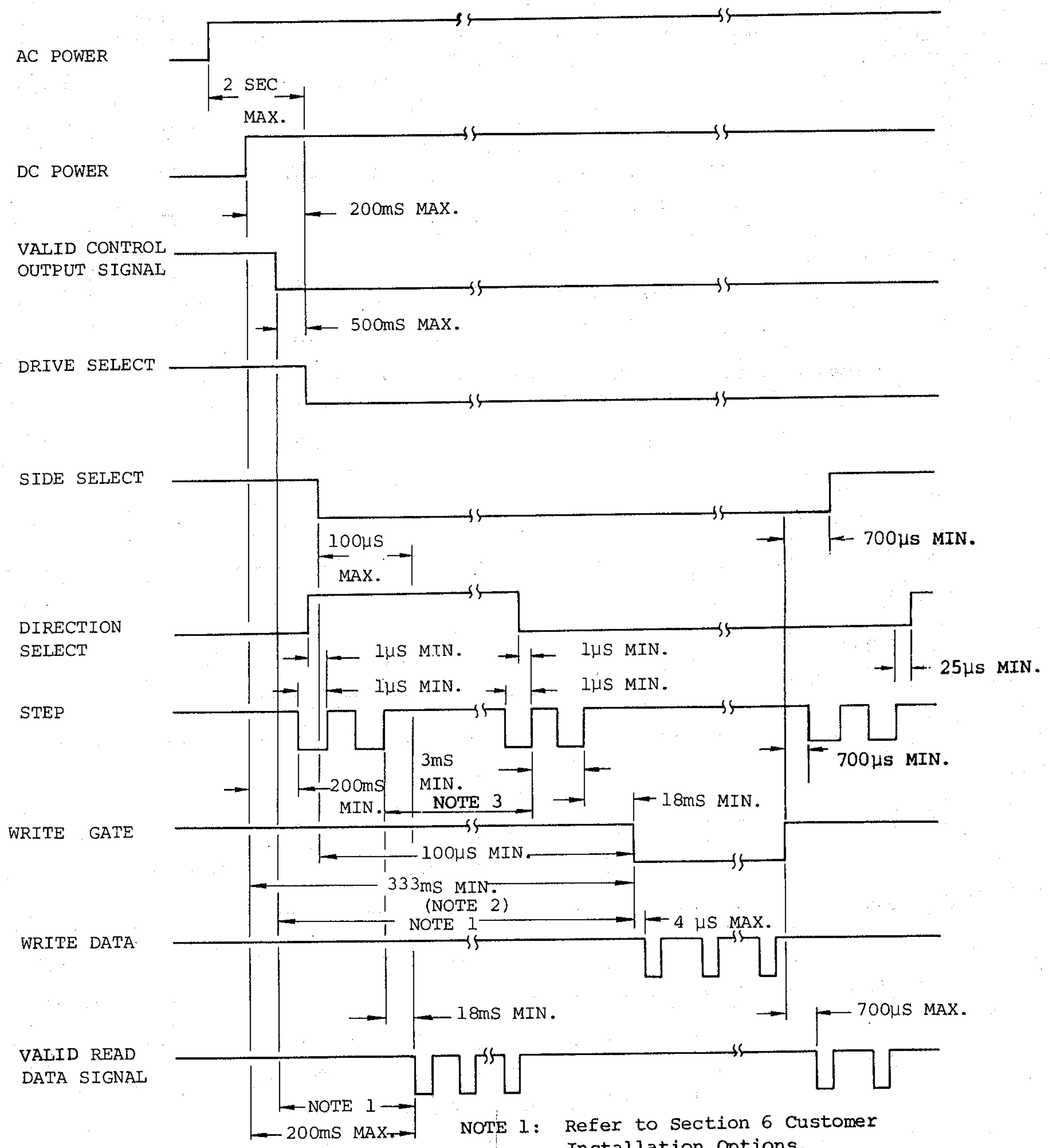

NOTE 1: Refer to Section 6 Customer Installation Options.

NOTE 2: 2 seconds for both AC and DC on at the same time.

NOTE 3: When reversing direction, issue a next step pulse after more than 18 ms counting from the step pulse before inversion.

Fig. 4-1 General Control and Data Timing

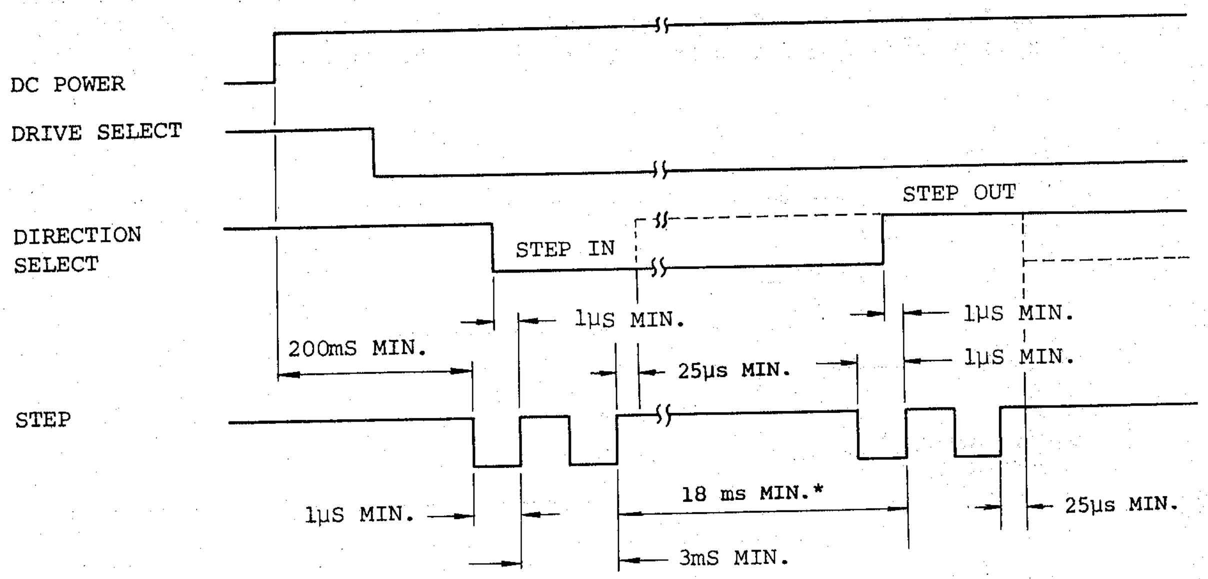

* When reversing direction, issue a next step pulse after more than 18 ms counting from the step pulse before inversion.

Fig. 4-2 Track Access Timing

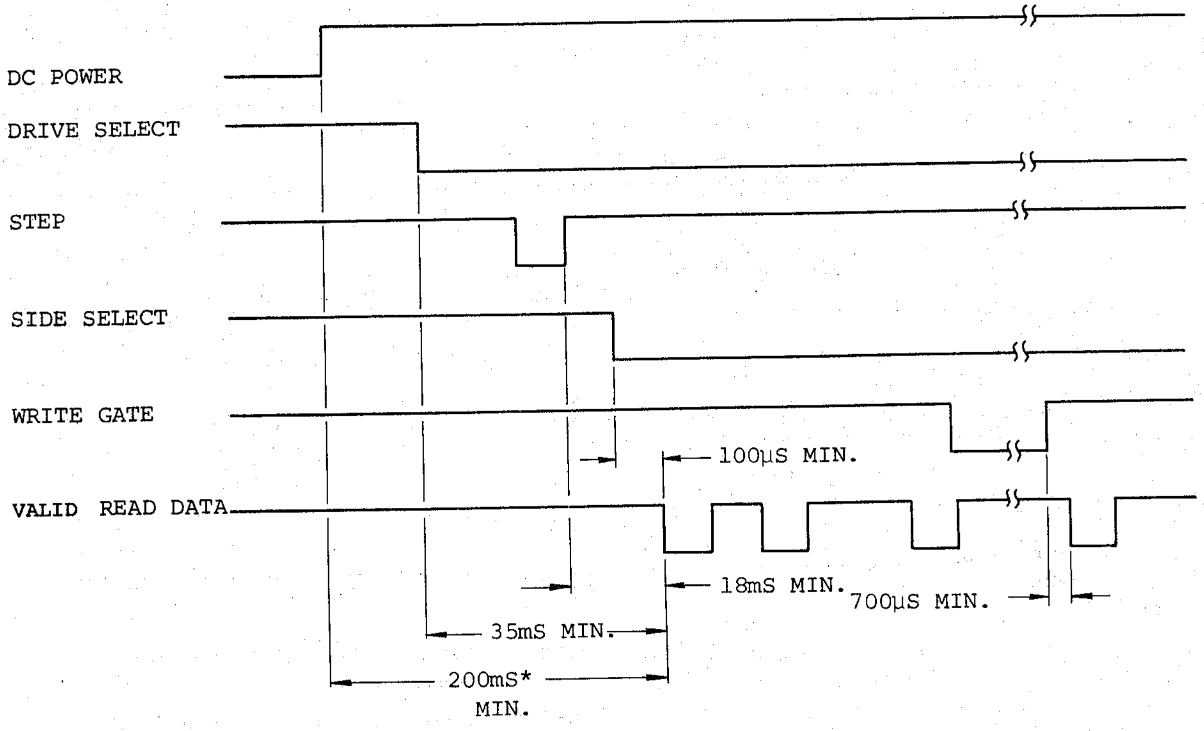

* 2 seconds for both AC and DC on at the same time.

Fig. 4-3 Read Operation Start Timing

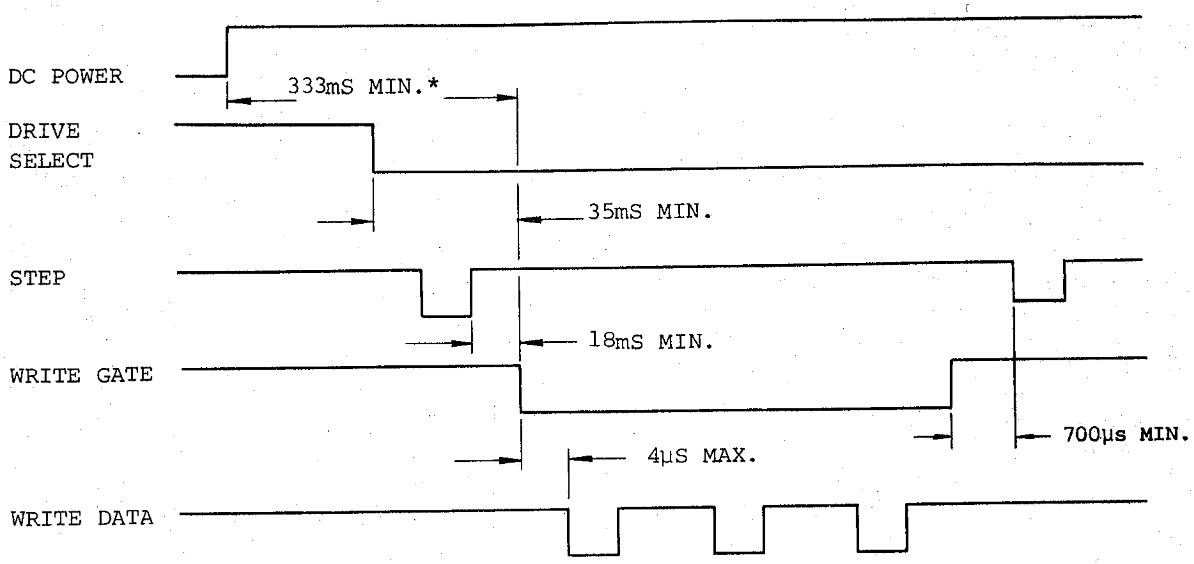

* 2 seconds for both AC and DC on at the same time.

Fig. 4-4 Write Operation Start Timing

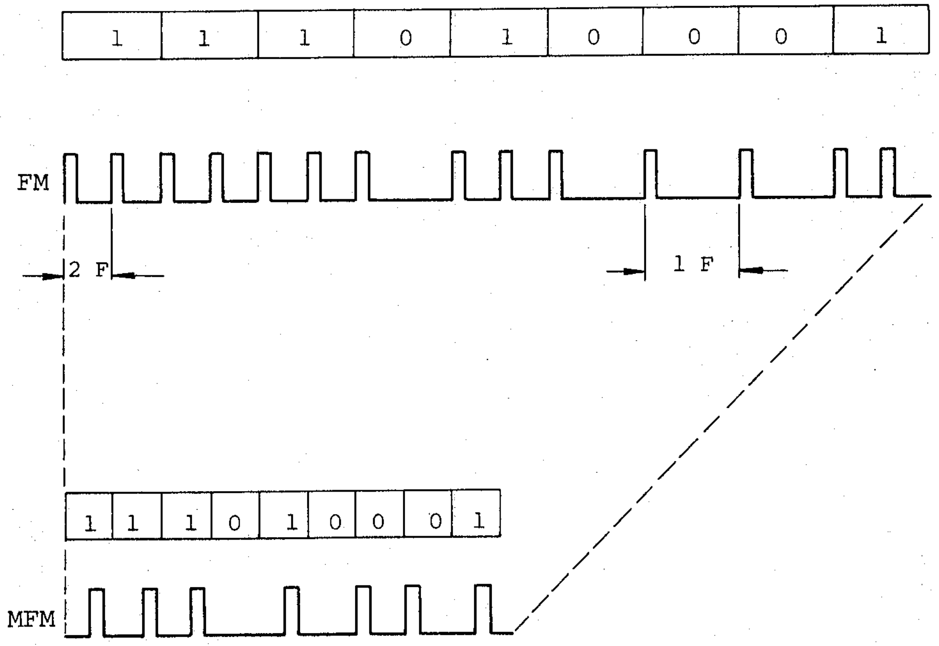

Fig. 4-5 Comparison between FM and MFM Coding Systems

CHAPTER 5 PHYSICAL INTERFACE

Electronic interfaces between the M2894 and the host system are accomplished with three connectors. The J1 connector is for signal interfaces, the J5 connector is for DC power, and the J4 connector is for AC power and frame grounding. Connectors used for the M2894, and recommended mating connectors are described below.

5.1 Signal Connectors (J1/P1)

J1 is a card-edge type 50-pin (both sides used with 25 pins per side) connector with the component side pins even numbered (2, 4, ... 50) and the solder side pins odd numbered (1, 3, ... 49). There is a key slot between pin 4 and pin 6 to allow the use of a reverse-preventing key. J1 dimensions are shown in Fig. 5-1, and the recommended P1 connectors mating with J1 are shown in Table 5-1.

Table 5-1 Recommended P1 Connector Type

Cable used	Maker	Connector housing	Contact
Twisted-pair cable No. 26	AMP	1-583717-1	583616-5 (Crimp) 583854-3 (Solder)
Flat cable	3M	3415-0001	NA

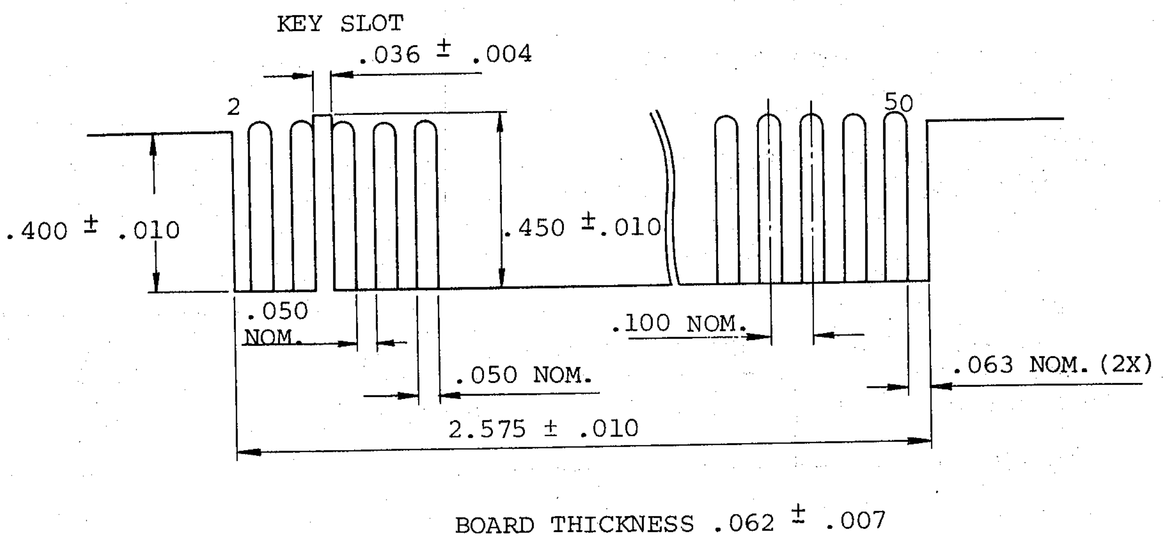

Fig. 5-1 J1 Connector Dimensions and Numbers (unit: inch)

5.2 DC Power Connector (J5/P5)

J5 is a DC power connector with 6 pins made by AMP, which is attached on the solder side of the printed-circuit board.

The No. 2 pin of J1 is located nearest to J1/P1. Fig. 4-2 shows the pin arrangement with this No. 2 pin as a reference, seen from the solder side. Pin numbers are indicated on the component side.

Table 5-2 P5 Connector Type

Cable used	Maker	Connector housing	Contact
AWG 20 to 14	AMP	1-480270-0	60619-1

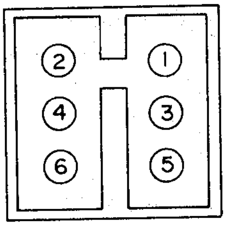

Fig. 5-2 J5 Connector Pin Arrangement
(view from solder side)

5.3 AC Power Connector (J4/P4)

J4 is an AC power connector attached to the side of phase-advance capacitor of the drive motor.

Table 5-3 shows the maker and type of P4 connector mating with J4. Fig. 4-3 shows J4 pin arrangement viewed from the rear of the unit.

Table 5-3 P4 Connector Type and Name

Cable used	Maker	Connector housing	Contact
AWG 20 to 14	AMP	1-480700-0	350536-1

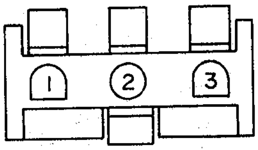

Fig. 5-3 J4 Connector Pin Arrangement
(view from the unit rear)

5.4 Interface Connectors Physical Location

Fig. 5-4 shows the physical locations of the M2894 interface connectors.

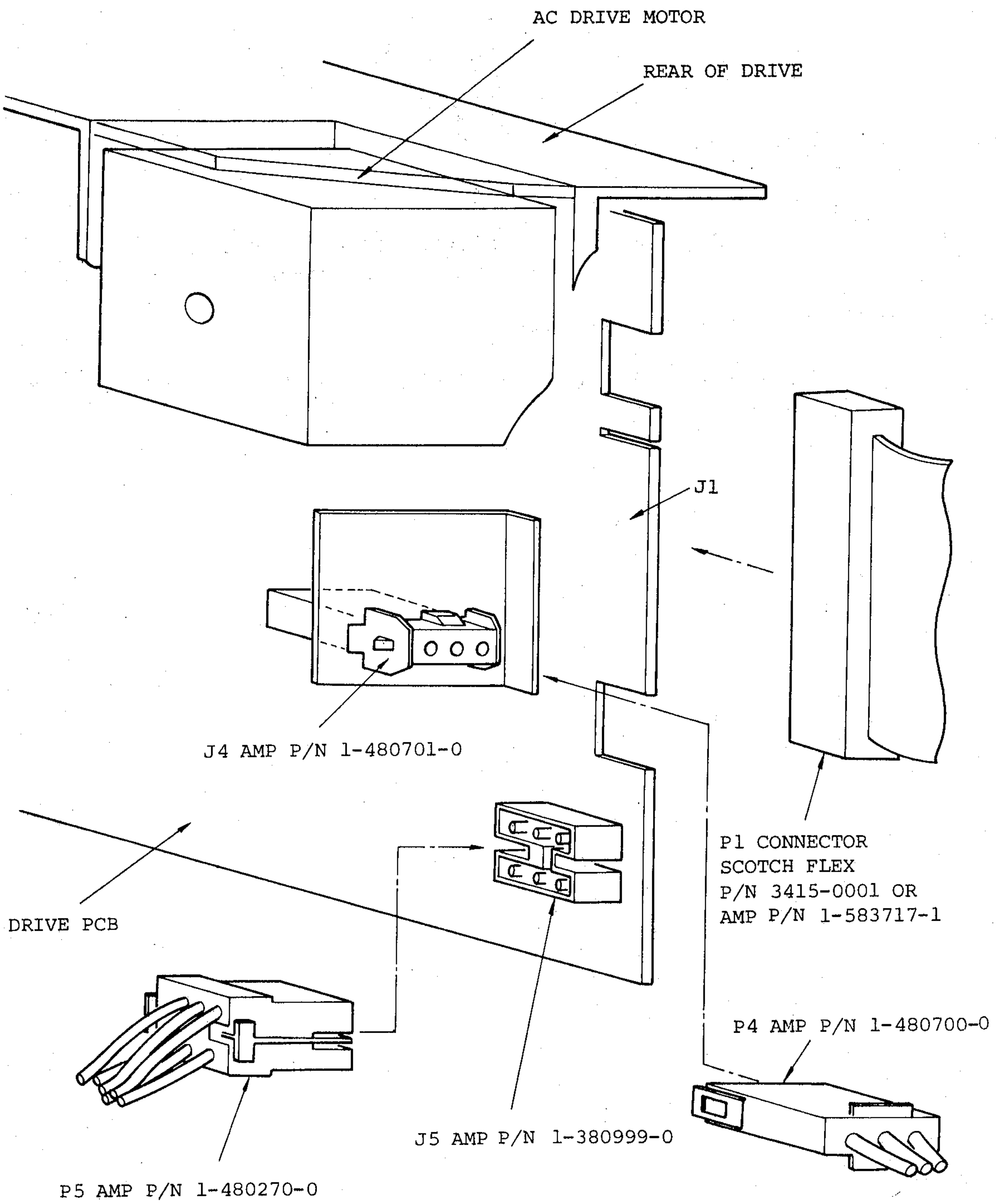

Fig. 5-4 Interface Connector Physical Location Diagram

CHAPTER 6 CUSTOMER INSTALLATION OPTIONS

The M2894 can be modified so that the non-standard operations described in sections 3 and 4 are performed.

These modifications are performed by connecting or disconnecting traces on the printed-circuit board and by using alternate input/output pins.

Some traces are connected with jumpers and program shunts (PJ1 to PJ8). The position of the traces at delivery from the factory is shown in Table 6-1. Fig. 6-1 shows the location of the traces on the printed-circuit board.

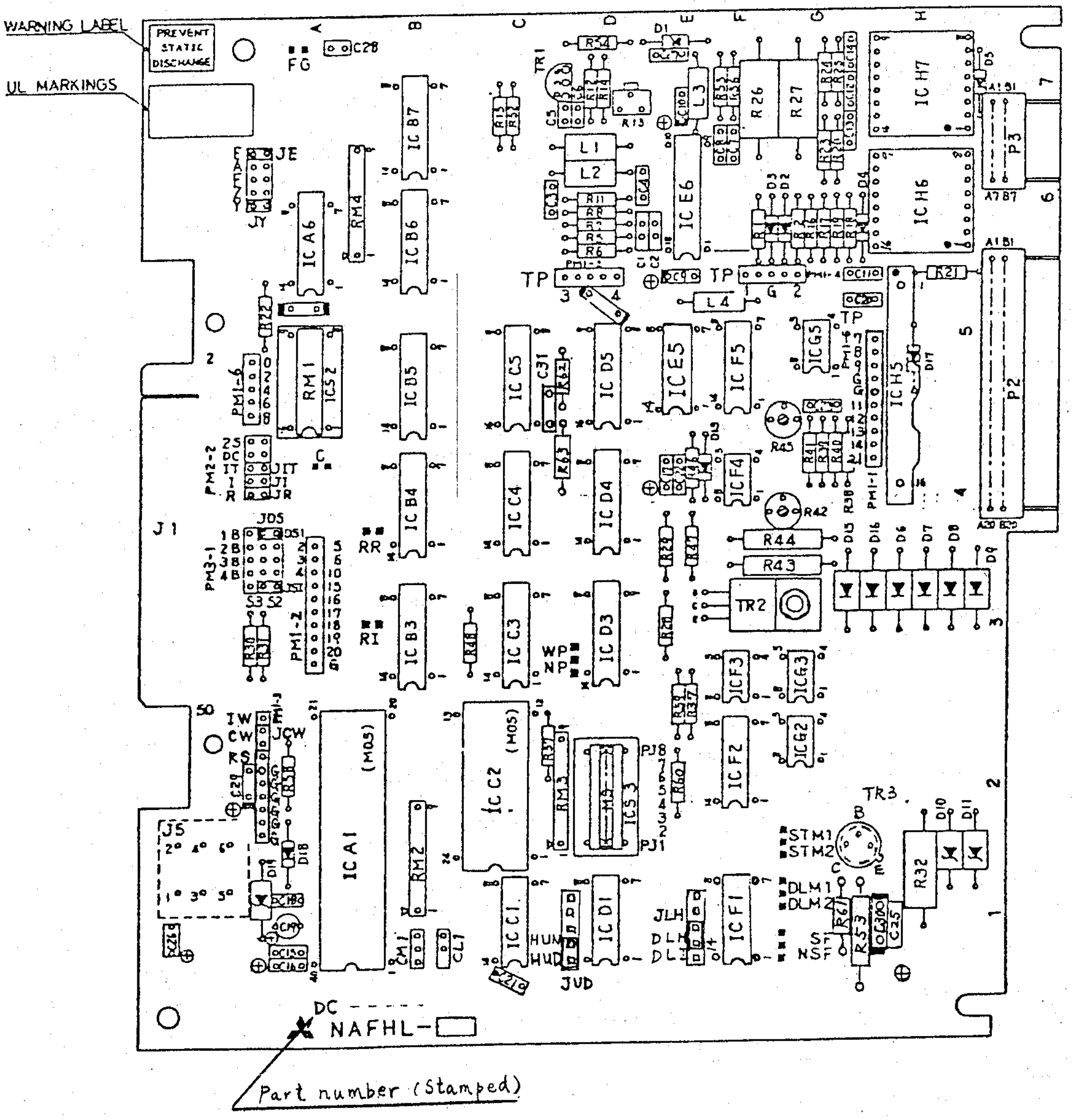

Fig. 6-1 Printed-Circuit Board Trace Location

Table 6.1 Customer Cut/Add Trade Options

Trace Designator	Location	Description	Shipped from factory	
			Open	Short
TERMINATOR	A5	Input line terminator		Plugged
PJ 1 (SHUNT)	D2	None		X
PJ 2 (SHUNT)	D2	READY standard or modified		X
PJ 3 (SHUNT)	D2	DOOR LOCK LATCH option		X
PJ 4 (SHUNT)	D2	HEAD LOAD from drive select		X
PJ 5 (SHUNT)	D2	Alternate input - HEAD LOAD		X
PJ 6 (SHUNT)	D2	HEAD LOAD LATCH from head load or in use		X
PJ 7 (SHUNT)	D2	STEPPER POWER from head load or drive select		X
PJ 8 (SHUNT)	D2	SIDE SELECT option using direction select		X
DS 1	A4	DRIVE SELECT 1 input pin		Plugged
DS 2, 3, 4	A4	DRIVE SELECT 2, 3, 4 input pin	X	
1B, 2B, 3B, 4B	A4	SIDE SELECT option using drive select	X	
RR	B4	Radial READY		X
RI	A3	Radial INDEX		X
R	A4	READY output		Plugged
I	A4	INDEX output		Plugged
2S	A4	TOW-SIDED status output	X	
DC	A4	DISK CHANGE option	X	
WP	C3	Inhibit write when WRITE PROTECTED		X
NP	C3	Allow write when WRITE PROTECTED	X	
A	A6	Drive selected with head load ANDed with drive select	X	
E	A6	No function		Plugged
Z	A6	IN USE LED activated by drive select	X	
Y	A6	IN USE LED activated by head load		Plugged
S2	A3	Standard SIDE SELECT input		Plugged
S3	A3	SIDE SELECT option using drive select	X	
IW	A1	WRITE CURRENT SWITCH from interface	X	
CW	A1	Internal WRITE CURRENT SWITCH		Plugged
STM1	E1	STEPPER POWER control from interface	X	
STM2	E1	STEPPER POWER normally energized		X
SF	D1	Internal SWITCH FILTER		X
NSF	D1	Without SWITCH FILTER	X	

(CONTINUED ON NEXT PAGE)

Table 6.1 (CONTINUED) Customer Cut/Add Trade Options

(CONTINUED)

Trace Designator	Location	Description	Shipped from factory	
			Open	Short
F	A6	INUSE LED activated by INUSE option	X	
HUN	D1	HEAD UNLOAD without delay	X	
HUD	D1	HEAD UNLOAD with delay		Plugged
DLI	F1	DOOR LOCK by inuse	X	
DLH	F1	DOOR LOCK by head load		Plugged
DLM1	G1	Door locked with head load ANDed with drive select		X
DLM2	G1	Door locked with head load	X	

6.1 Select Drive Without Loading Heads or Enabling Step Motor

In this option, the drive select can be effective without loading the heads and therefore the life of heads and media is further prolonged. When the system requires the drive to perform a read/write operation, the head load line is made active (logical "0"). This causes the heads to load and the step motor to be energized, when the stepper power control option (6.4) is active.

The write or read operation must be performed 35 ms or more after the head load line goes active.

To perform the modification for this option, connect or disconnect the following traces:

o Trace "PJ4": Open shunt at location D2

o Trace "PJ5": Open shunt at location D2

o Trace "PJ7": Open shunt at location D2

6.2 Select Drive and Enable Stepper Without Loading Heads

This option enables a seek operation by drive selection without loading the heads or with the door open. In this case, as in the one above, make sure to perform the read or write operation 35 ms or more after the head load line goes active (logical "0").

This option is recommended because it provides longer media life by making M2894 tap-tap medium wear negligible.

To perform the modification for this option, connect or disconnect the following traces:

o Trace "PJ4": Open shunt at location D2

o Trace "PJ5": Open shunt at location D2

o Trace "PJ7": Close shunt at location D2

6.3 Load Heads Without Selecting Drive or Enabling Step Motor

This option is used for a mutual copy operation between diskettes in which the need for considering head load time can be eliminated and copy time can thus be reduced. Each drive remains in the head load condition for alternate input/output pins.

The read or write operation must be performed 18 ms or more after drive selection.

To perform the modification for this option, connect or disconnect the following traces:

o Trace "PJ4": Open shunt at location D2

o Trace "PJ5": Open shunt at location D2

o Trace "PJ7": Close shunt at location D2

o Trace "A": Connect

6.4 Stepper Power Control

The stepping motor in the M2894 is normally energized when DC power is applied.

This option enables the M2894 to control the stepping motor energizing by the drive select or head load signal. The drive select or head load signal must be active for more than 18 ms after step pulse imputted. To perform the stepping motor power control option, connect or disconnect the following traces:

o Trace "STM2" Open shunt at location D1

o Trace "STM1" Close shunt at location D1

Refer to clauses 6.1, 6.2, and 6.3 for controlling the stepping motor.

6.5 Radial Ready

This option enables the ready line of each drive to be monitored without drive selection.

To perform the modification for this option, disconnect the following traces:

o Trace "R": Disconnect

o Trace "RR": Disconnect

o Trace "R": Separate the connection and transfer it to one of alternate input/output pins.
(To use alternate input/output pin No. 2, open trace "0-2")

The circuit relating to this modification is shown in Fig. 6-2.

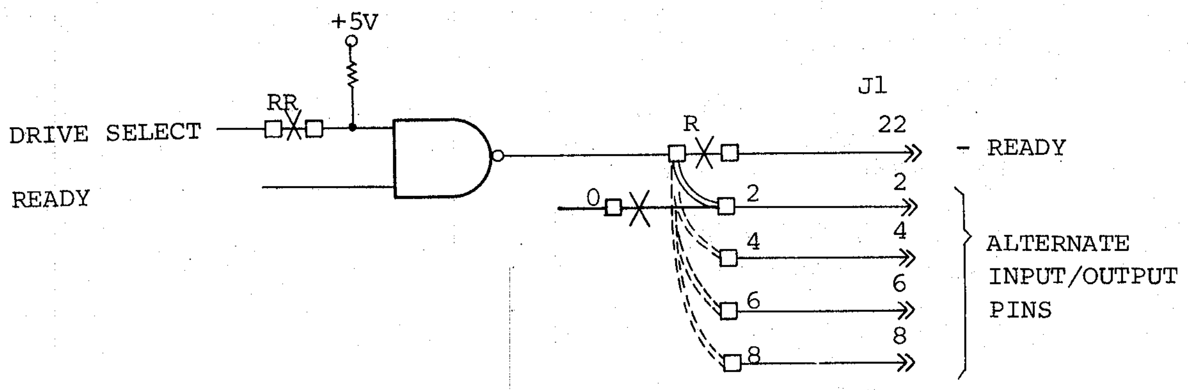

Fig. 6-2 Radial Ready Circuit

6.6 Radial Index

This option enables constant monitoring on the index line and reduces mean latency time.

To perform the modification for this option, disconnect the following traces:

- o Trace "RI": Disconnect
- o Trace "I": Disconnect
- o Trace "I": Separate the connection and transfer it to one of alternate input/output pins. (To use alternate input/output pin No. 2, open trace 0-2".)

The circuit relating to this modification is shown in Fig. 6-3.

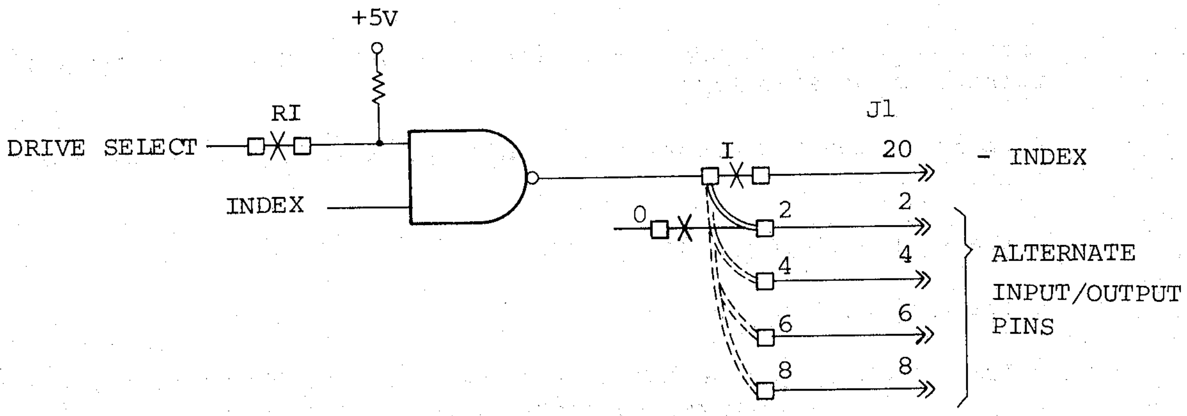

Fig. 6-3 Radial Index

6.7 In Use Alternate Input (Activity LED)

When this alternate input becomes a logical "0," the activity LED on the front panel lights.

This signal is ORed a drive select, or head load. The circuit relating to this modification is shown in Fig. 6-4. Also refer to 6.12 for "In Use" signal applications.

To perform the modification for this option, connect or disconnect the following traces:

- o Trace "F": connect (IN USE)
- o Trace "Z": connect (drive select)
- o Trace "Y": disconnect (head load)

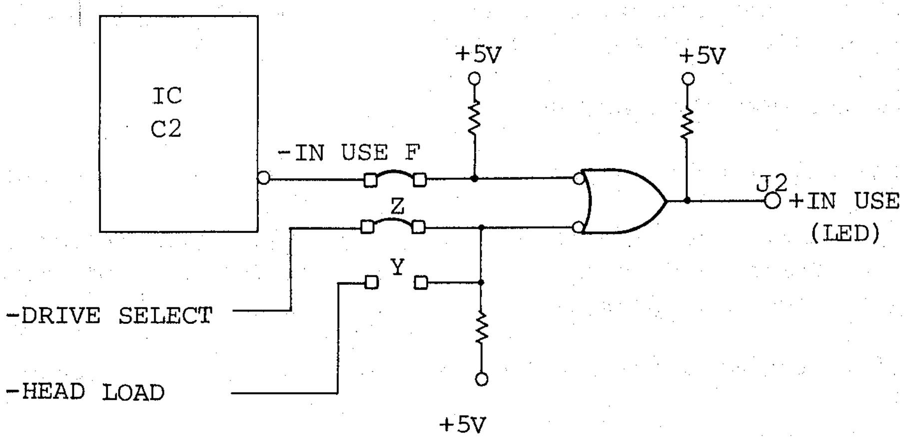

Fig. 6-4 In Use/Activity LED Circuit

6.8 Write Protection Option Use

When a diskette with write protect notch is inserted at delivery from the factory, the write protect is set so that writing is inhibited within the drive.

The modification for this option releases an inserted diskette with a write notch from write inhibition, and informs the interface of the release.

This option is used to identify a special-use diskette. To perform the modification for this option, connect or disconnect the following traces:

- o Trace "WP": Disconnect
- o Trace "NP": Connect

The circuit relating to this modification is shown in Fig. 6-5.

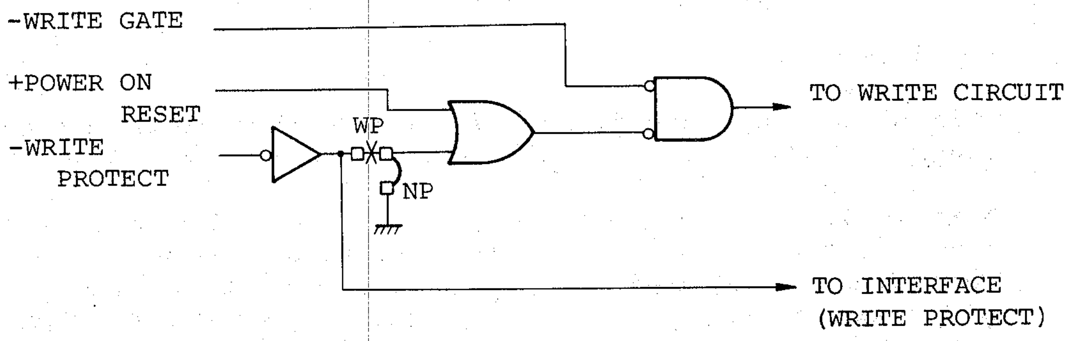

Fig. 6-5 Write Protect Circuit

6.9 Disk Change (Alternate Output)

For this option, connect Trace "DC."

When a not-selected drive becomes Ready after Not Ready (door is open) and drive select goes active, the line of this option goes to the logical "0" level. When the drive is Ready, the line resets at the point when the drive select reverses from logical "0" to logical "1."

6.10 Side Selection Using Direction Select

The side select can also be controlled by the direction select line.

This option provides control two ways: one for controlling head motion direction during a seek operation; the other for head select control during a read/write operation.

To perform the modification for this option, open shunt trace "PJ8" at location D2.

6.11 Side Selection Using Drive Select

In a system using one or two M2894s, it is possible to separate each head and assign drive addresses to them. In this event, four drive select lines are used to select four read/write heads.

To perform the modification for this option, connect or disconnect the following traces:

o Transfer the trace "S2" jumper to trace "S3."

o For the first drive, connect traces "DS1" and "2B" using a jumper.

o For the second drive, connect traces "DS3" and "4B" using a jumper.

The drive select lines then perform a side select operation as follows:

Drive select 1 selects the first drive side 0.

Drive select 2 selects the first drive side 1.

Drive select 3 selects the second drive side 0.

Drive select 4 selects the second drive side 1.

6.12 Door Lock Latch

This option causes the door to be latched and to remain locked, under control of drive select, without maintaining In Use active.

When the In Use line is active (logical "0"), and drive select line becomes active (logical "0"), the door is latched and a door lock condition is maintained. To release the door lock condition, make the In Use line inactive (logical "1"), and make the drive select line active.

The drive select line must be active for more than 1 millisecond.

To perform the modification for this option, connect or disconnect the following traces:

o Trace "PJ3" Open shunt at location D2

o Trace "PJ4" Close shunt at location D2

o Trace "PJ5" Close shunt at location D2

6.13 Two-Sided

This signal discriminates which type of diskette (two-sided or single-sided) is inserted. A logical "0" is output for insertion of a two-sided diskette.

To perform the modification for this option, connect trace "2S."

6.14 Write Current Switch

By making this interface signal logical "0" for tracks 44 to 76, write current can be decreased; otherwise the current is controlled internally.

To perform the modification for this option, transfer the trace "CW" jumper plug to trace "IW." When this option is not used, interface connector pin No. 2 can be used for an alternate input/output pin, with trace "0-2" disconnected.

6.15 Ready Standard/Ready Modified

This option is used to cause Ready to maintain a logical "0" when Side 1 is selected while using a single-sided medium. This option is useful when direction select is used as side select.

To perform the modification for this option, open trace "PJ2" location D2 shunt.

6.16 Head Load Latch

This option is used to perform head load when the drive is not selected.

To perform the modification for this option, connect or disconnect the following traces:

When head load signal is active, and drive select switch is used to latch:

o Trace "PJ4": Open shunt at location D2

o Trace "PJ5": Close shunt at location D2

o Trace "PJ6": Close shunt at location D2

When In Use signal is active, and drive select is used to latch:

- o Trace "PJ4": Open shunt at location D2
- o Trace "PJ5": Close shunt at location D2
- o Trace "PJ6": Open shunt at location D2

To release head load latch, make the head load line or in use line inactive (logical "1"), then select the drive.

6.17 Door Lock Condition

The door lock condition is issued by drive-select and in use when trace DLI jumpered.
When DLH jumpered, this condition is issued by drive-select and head-load.

6.18 Head Unload Condition

When HUD jumpered, head load condition is maintained for about 1 second.
When HUN jumpered, this condition has no delay.

CHAPTER 7 DRIVE PHYSICAL SPECIFICATIONS

This section describes the M2894 dimensions and installation procedure.

7.1 Drive Dimensions

Fig. 7-1 shows the M2894 drive dimensions, screw mounting hole locations and dimensions, and front panel dimensions.

7.2 Mounting Recommendations

The M2894 can be installed in the following directions without mechanical adjustment:

o Vertical: Door opens to the right or left.

o Horizontal: Door opens upward.

o Upright: Diskette is inserted from the top.

In this case, the stepping motor is powered always.
The trace on PCB 'STM2' must be jumpered, 'STM1' disconnected.

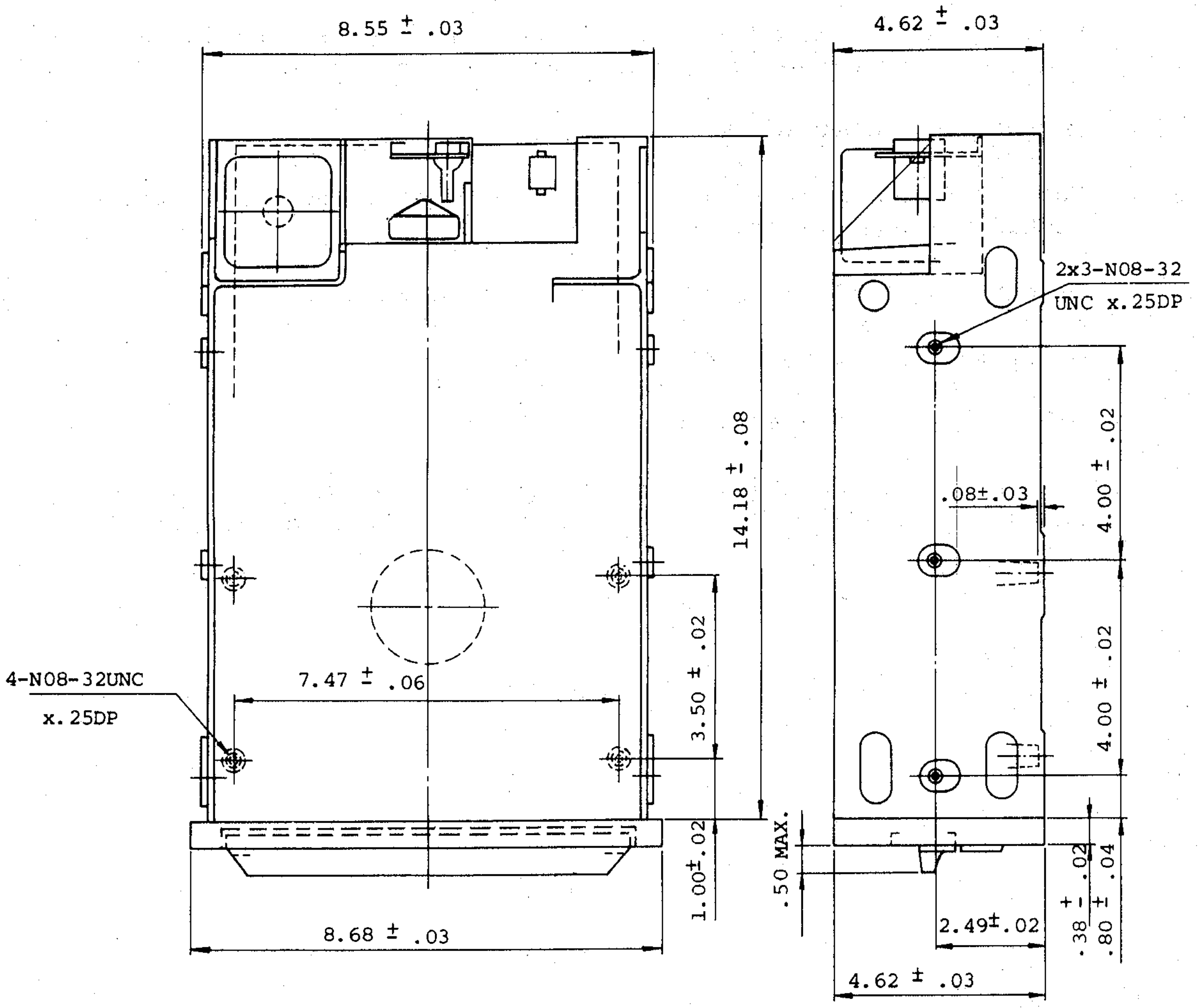

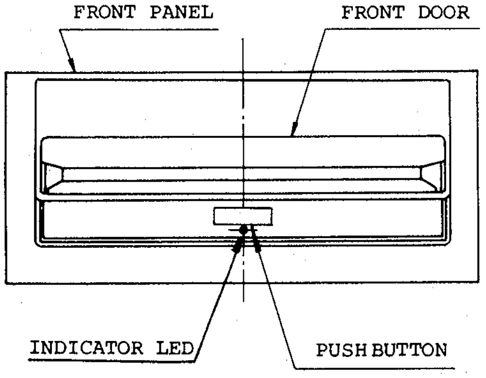

Parts	Color
Front Panel	Ivory-White
Front Door	
Pushbutton	

Fig. 7-1 M2894 Drive Dimensions

CHAPTER 8 ERROR DETECTION AND CORRECTION

This section describes general analysis of data errors and data correction.

8.1 Write Error

If an write error occurs during a write operation, it will be detected on the next revolution by performing a read operation, commonly called a "write check." To correct the error, another write and write check operation must be done. If the write operation is not successful after several attempts have been made, a read operation should be attempted on another track to determine if the drive is safe. If the other track is read correctly, the track on which write failed is a defective track and operation should be changed to another track or another medium.

8.2 Read Error

Most read errors that occur will be "soft" errors; that is, by performing an error-recovery procedure, the data will be recovered.

Soft errors are usually caused by:

- o Airborne contaminants that pass between the read/write head and the disk medium. These contaminants will generally be removed by the cartridge self-cleaning wiper.
- o Random electrical noise, which usually lasts for a few microseconds to several milliseconds.
- o Small defects in the written data and/or track not detected during the write operation, which may cause a soft error during a read.

The following procedures are recommended to recover from these soft errors:

Step 1: Re-read the track several times or until such time as the data is recovered.

Step 2: If data is not recovered after step 1, access the head to the adjacent track in the same direction as previously moved, then return to the desired track.

Step 3: Repeat step 1.

Step 4: If data is not recovered, the error is not recoverable.

CHAPTER 9 RESHIPMENT PRECAUTIONS

Be sure to insert the shipping disk that was shipped with the unit, and close the door when reshipping it.

CHAPTER 6 CUSTOMER INSTALLATION OPTIONS

The M2894 can be modified so that the non-standard operations described in sections 3 and 4 are performed.

These modifications are performed by connecting or disconnecting traces on the printed-circuit board and by using alternate input/output pins.

Some traces are connected with jumpers and program shunts (PJ1 to PJ8). The position of the traces at delivery from the factory is shown in Table 6-1. Fig. 6-1 shows the location of the traces on the printed-circuit board.

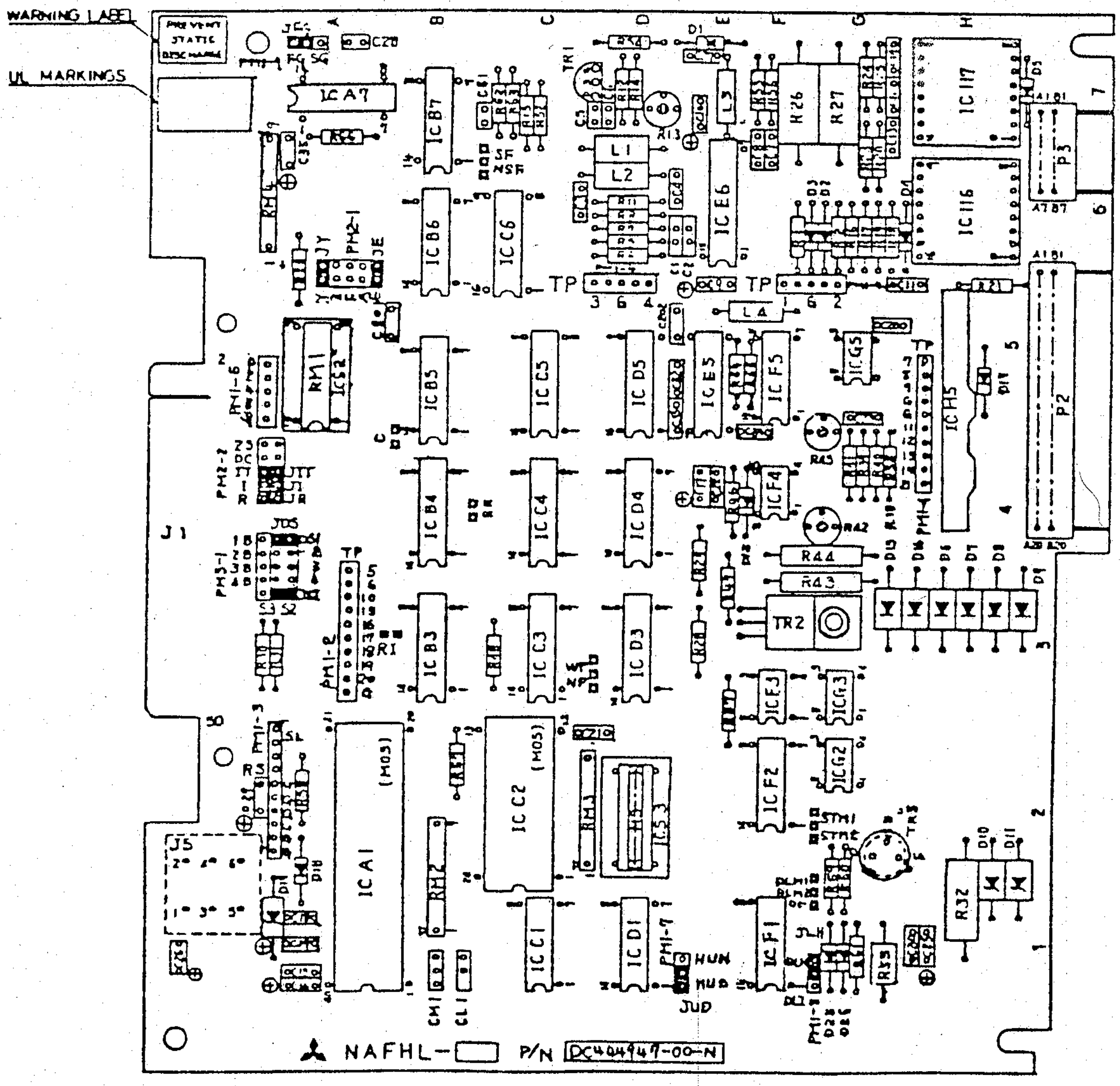

Fig. 6-1 Printed-Circuit Board Trace Location

Table 6.1 Customer Cut/Add Trade Options

Trace Designator	Location	Description	Shipped from factory	
			Open	Short
TERMINATOR	A5	Input line terminator		Plugged
PJ 1 (SHUNT)	D2	None		X
PJ 2 (SHUNT)	D2	READY standard or modified		X
PJ 3 (SHUNT)	D2	DOOR LOCK LATCH option		X
PJ 4 (SHUNT)	D2	HEAD LOAD from drive select		X
PJ 5 (SHUNT)	D2	Alternate input - HEAD LOAD		X
PJ 6 (SHUNT)	D2	HEAD LOAD LATCH from head load or in use		X
RJ 7 (SHUNT)	D2	STEPPER POWER from head load or drive select		X
PJ 8 (SHUNT)	D2	None		X
DS 1	A4	DRIVE SELECT 1 input pin		Plugged
DS 2, 3, 4	A4	DRIVE SELECT 2, 3, 4 input pin	X	
1B, 2B, 3B, 4B	A4	SIDE SELECT option using drive select	X	
RR	B4	Radial READY		X
RI	A3	Radial INDEX		X
R	A4	READY output		Plugged
I	A4	INDEX output		Plugged
2S	A4	TOW-SIDED status output	X	
DC	A4	DISK CHANGE option	X	
WP	C3	Inhibit write when WRITE PROTECTED		X
NP	C3	Allow write when WRITE PROTECTED	X	
A	A6	Drive selected with head load ANDed with drive select	X	
E	A6	No function		Plugged
Z	A6	IN USE LED activated by drive select	X	
Y	A6	IN USE LED activated by head load		Plugged
S1	A2	SIDE SELECT option using direction select	X	
S2	A3	Standard SIDE SELECT input		Plugged
S3	A3	SIDE SELECT option using drive select	X	
STM1	F2	STEPPER POWER control from interface	X	
STM2	F2	STEPPER POWER normally energized		X
SF	B7	Internal SWITCH FILTER		X
NSF	B7	Without SWITCH FILTER	X	

(CONTINUED ON NEXT PAGE)

Table 6.1 (CONTINUED) Customer Cut/Add Trade Options

(CONTINUED)

Trace Designator	Location	Description	Shipped from factory	
			Open	Short
F	A6	INUSE LED activated by INUSE option	X	
HUN	D1	HEAD UNLOAD without delay	X	
HUD	D1	HEAD UNLOAD with delay		Plugged
DLI	F1	DOOR LOCK by inuse	X	
DLH	F1	DOOR LOCK by head load		Plugged
DLM1	F1	Door locked with head load ANDed with drive select		X
DLM2	F1	Door locked with head load	X	

6.1 Select Drive Without Loading Heads or Enabling Step Motor

In this option, the drive select can be effective without loading the heads and therefore the life of heads and media is further prolonged. When the system requires the drive to perform a read/write operation, the head load line is made active (logical "0"). This causes the heads to load and the step motor to be energized, when the stepper power control option (6.4) is active.

The write or read operation must be performed 35 ms or more after the head load line goes active.

To perform the modification for this option, connect or disconnect the following traces:

o Trace "PJ4": Open shunt at location D2

o Trace "PJ5": Open shunt at location D2

o Trace "PJ7": Open shunt at location D2

6.2 Select Drive and Enable Stepper Without Loading Heads

This option enables a seek operation by drive selection without loading the heads or with the door open. In this case, as in the one above, make sure to perform the read or write operation 35 ms or more after the head load line goes active (logical "0").

This option is recommended because it provides longer media life by making M2894 tap-tap medium wear negligible.

To perform the modification for this option, connect or disconnect the following traces:

o Trace "PJ4": Open shunt at location D2

o Trace "PJ5": Open shunt at location D2

o Trace "PJ7": Close shunt at location D2

6.3 Load Heads Without Selecting Drive or Enabling Step Motor

This option is used for a mutual copy operation between diskettes in which the need for considering head load time can be eliminated and copy time can thus be reduced. Each drive remains in the head load condition for alternate input/output pins.

The read or write operation must be performed 18 ms or more after drive selection.

To perform the modification for this option, connect or disconnect the following traces:

o Trace "PJ4": Open shunt at location D2

o Trace "PJ5": Open shunt at location D2

o Trace "PJ7": Close shunt at location D2

o Trace "A": Connect

6.4 Stepper Power Control

The stepping motor in the M2894 is normally energized when DC power is applied.

This option enables the M2894 to control the stepping motor energizing by the drive select or head load signal. The drive select or head load signal must be active for more than 18 ms after step pulse imputted. To perform the stepping motor power control option, connect or disconnect the following traces:

o Trace "STM2" Open shunt at location D1

o Trace "STM1" Close shunt at location D1

Refer to clauses 6.1, 6.2, and 6.3 for controlling the stepping motor.

6.5 Radial Ready

This option enables the ready line of each drive to be monitored without drive selection.

To perform the modification for this option, disconnect the following traces:

o Trace "R": Disconnect

o Trace "RR": Disconnect

o Trace "R": Separate the connection and transfer it to one of alternate input/output pins.
(To use alternate input/output pin No. 2, open trace "0-2")

The circuit relating to this modification is shown in Fig. 6-2.

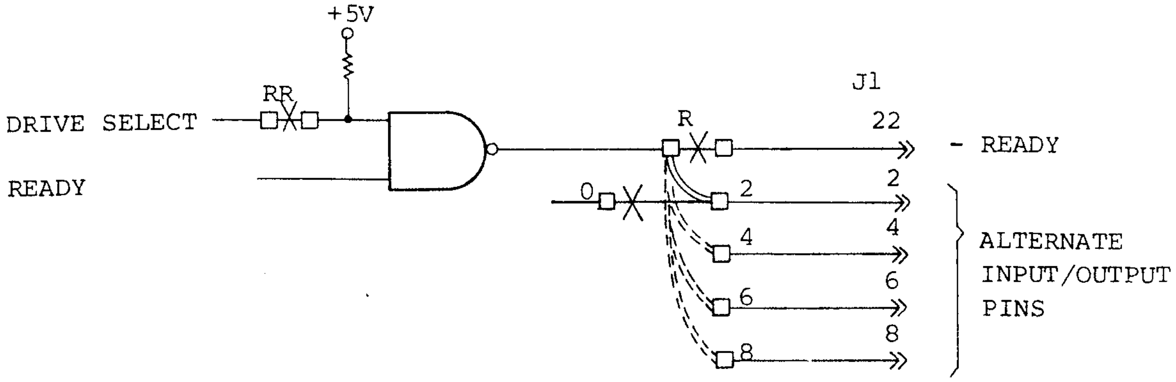

Fig. 6-2 Radial Ready Circuit

6.6 Radial Index

This option enables constant monitoring on the index line and reduces mean latency time.

To perform the modification for this option, disconnect the following traces:

o Trace "RI": Disconnect

o Trace "I": Disconnect

o Trace "I": Separate the connection and transfer it to one of alternate input/output pins.
(To use alternate input/output pin No. 2, open trace 0-2".)

The circuit relating to this modification is shown in Fig. 6-3.

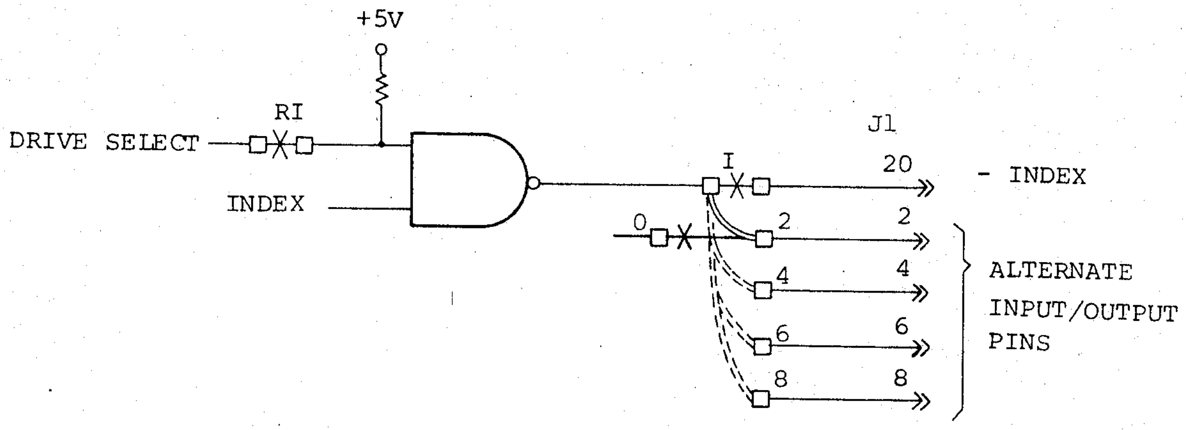

Fig. 6-3 Radial Index

6.7 In Use Alternate Input (Activity LED)

When this alternate input becomes a logical "0," the activity LED on the front panel lights.

This signal is ORed a drive select, or head load. The circuit relating to this modification is shown in Fig. 6-4. Also refer to 6.12 for "In Use" signal applications.

To perform the modification for this option, connect or disconnect the following traces:

o Trace "F": connect (IN USE)

o Trace "Z": connect (drive select)

o Trace "Y": disconnect (head load)

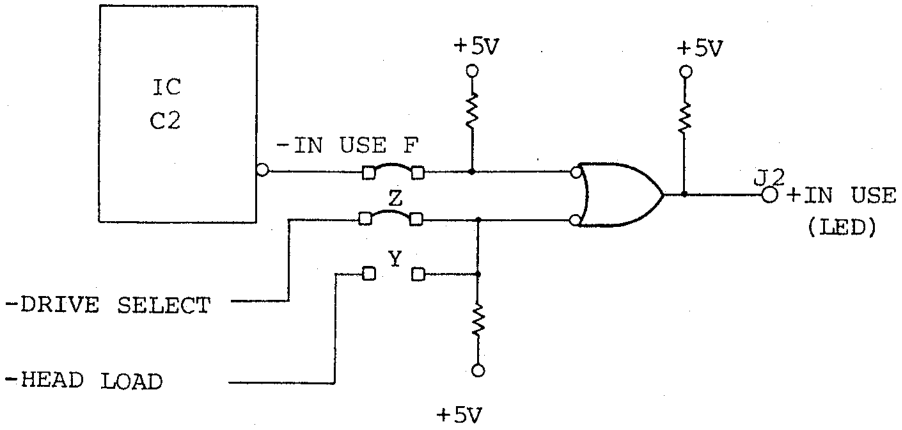

Fig. 6-4 In Use/Activity LED Circuit

6.8 Write Protection Option Use

When a diskette with write protect notch is inserted at delivery from the factory, the write protect is set so that writing is inhibited within the drive.

The modification for this option releases an inserted diskette with a write notch from write inhibition, and informs the interface of the release.

This option is used to identify a special-use diskette. To perform the modification for this option, connect or disconnect the following traces:

- o Trace "WP": Disconnect
- o Trace "NP": Connect

The circuit relating to this modification is shown in Fig. 6-5.

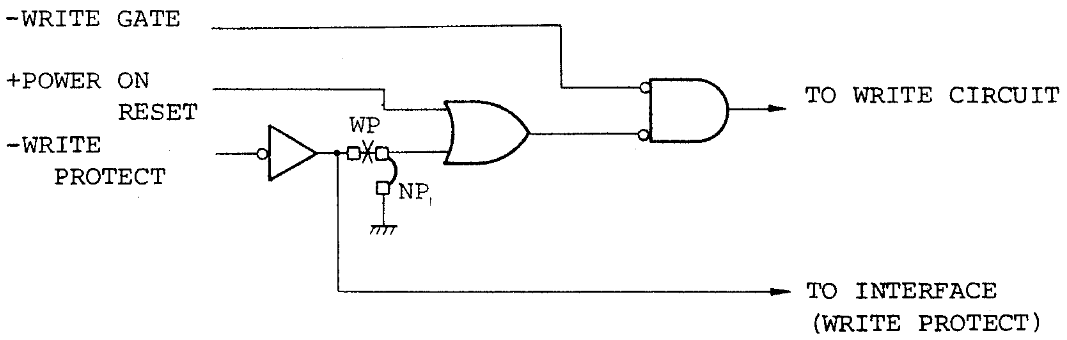

Fig. 6-5 Write Protect Circuit

6.9 Disk Change (Alternate Output)

For this option, connect Trace "DC."

When a not-selected drive becomes Ready after Not Ready (door is open) and drive select goes active, the line of this option goes to the logical "0" level. When the drive is Ready, the line resets at the point when the drive select reverses from logical "0" to logical "1."

6.10 Side Selection Using Direction Select

The side select can also be controlled by the direction select line.

This option provides control two ways: one for controlling head motion direction during a seek operation; the other for head select control during a read/write operation.

To perform the modification for this option, move the trace "S2" jumper to trace "S1."

6.11 Side Selection Using Drive Select

In a system using one or two M2894s, it is possible to separate each head and assign drive addresses to them. In this event, four drive select lines are used to select four read/write heads.

To perform the modification for this option, connect or disconnect the following traces:

- Transfer the trace "S2" jumper to trace "S3."
- For the first drive, connect traces "DS1" and "2B" using a jumper.
- For the second drive, connect traces "DS3" and "4B" using a jumper.

The drive select lines then perform a side select operation as follows:

Drive select 1 selects the first drive side 0.

Drive select 2 selects the first drive side 1.

Drive select 3 selects the second drive side 0.

Drive select 4 selects the second drive side 1.

6.12 Door Lock Latch

This option causes the door to be latched and to remain locked, under control of drive select, without maintaining In Use active.

When the In Use line is active (logical "0"), and drive select line becomes active (logical "0"), the door is latched and a door lock condition is maintained. To release the door lock condition, make the In Use line inactive (logical "1"), and make the drive select line active.

The drive select line must be active for more than 1 millisecond.

To perform the modification for this option, connect or disconnect the following traces:

- o Trace "PJ3" Open shunt at location D2
- o Trace "PJ4" Close shunt at location D2
- o Trace "PJ5" Close shunt at location D2

6.13 Two-Sided

This signal discriminates which type of diskette (two-sided or single-sided) is inserted. A logical "0" is output for insertion of a two-sided diskette.

To perform the modification for this option, connect trace "2S."

6.14 Ready Standard/Ready Modified

This option is used to cause Ready to maintain a logical "0" when Side 1 is selected while using a single-sided medium. This option is useful when direction select is used as side select.

To perform the modification for this option, open trace "PJ2" location D2 shunt.

6.15 Head Load Latch

This option is used to perform head load when the drive is not selected.

To perform the modification for this option, connect or disconnect the following traces:

When head load signal is active, and drive select switch is used to latch:

- o Trace "PJ4": Open shunt at location D2
- o Trace "PJ5": Close shunt at location D2
- o Trace "PJ6": Close shunt at location D2

When In Use signal is active, and drive select is used to latch:

- o Trace "PJ4": Open shunt at location D2
- o Trace "PJ5": Close shunt at location D2
- o Trace "PJ6": Open shunt at location D2

To release head load latch, make the head load line or in use line inactive (logical "1"), then select the drive.

6.16 Door Lock Condition

The door lock condition is issued by drive-select and in use when trace DLI jumpered.
When DLH jumpered, this condition is issued by drive-select and head-load.

6.17 Head Unload Condition

When HUD jumpered, head load condition is maintained for about 1 second.
When HUN jumpered, this condition has no delay.